GNB®
INDUSTRIAL POWER
A Division of Exide Technologies

Industrial Batteries / Network Power

Classic OPzS

*»Proven **high reliability energy storage** for **critical applications**«*

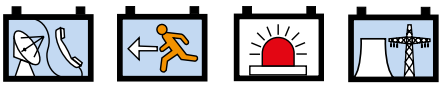

Classic®

Industrial Batteries

The powerful range of Network Power

GNB® Industrial Power offers reliable energy storage solutions for critical systems requiring uninterrupted power supply. With a comprehensive product range based on state-of-the-art technologies, GNB delivers the right battery for every application.

The below table is only indicative and depends on the specific customer application. For more information please ask a GNB sales representative.

Applications	Battery ranges																		
	Sonnenschein							Marathon		Sprinter		Absolyte	Powerfit	Classic					
	A400/ A600	A400 FT	A500	A700	SOLAR	RAIL	Power Cycle	M-FT	L/XL	P/XP	XP-FT	GP/GX	S100/ S300	GroE	OCSM	OPzS	Energy Bloc/OGi	Solar	rail
Telecom	●	●	●	●			●	●	●		●	●			●	●	●		
UPS	●	●	●	●			●	●	●	●	●	●			●		●		
Emergency lighting	●	●	●	●			●	●	●	●	●		●			●	●		
Security	●		●	●						●	●		●		●	●			
Utility	●	●		●			●	●	●			●		●	●	●	●		
Railways	●	●	●	●		●	●	●	●			●			●		●		●
Photovoltaic					●		●					●						●	
Universal	●	●	●	●			●	●	●	●	●	●	●		●	●	●		

Powerful product brands

ABSOLYTE® MARATHON® Sprinter® Powerfit®

> VRLA batteries (**V**alve **R**egulated **L**ead **A**cid) in which the electrolyte is fixed in an **A**bsorbent **G**lass **M**at (AGM)
> Excellent high current capability
> Very economical
> Maintenance-free (no topping up)

Sonnenschein®

> VRLA batteries (**V**alve **R**egulated **L**ead **A**cid) in which the electrolyte is fixed in a gel (dryfit® technology)
> Inventor of Gel technology
> Highest reliability, even in non-optimal conditions
> Particularly suitable for cyclic applications
> Maintenance-free (no topping up)

Classic®

> Conventional lead-acid batteries with liquid electrolyte
> Extreme reliability, proven over decades
> Low maintenance

Classic OPzS

Developed from experience – produced for safe power supply

Classic OPzS batteries have been proven energy suppliers for decades, which convince in robustness, reliability and extremely long design- or cycle life.

Your benefits:

> **Optimised plate design** – increased capacities compared to standard DIN OPzS

> **Tubular plates in block and single cell version** – most robust design

> **Excellent standby and cycling behaviour** – long life

> **Completely recyclable** – low CO_2 footprint

Specifications:

> Very high operational reliability under rough operating conditions
> Low maintenance due to optimised alloy and large electrolyte reserve
> Nominal capacity 50 – 3350 Ah C_{10}; up to 12000 Ah on request
> 20 years design life at 20 °C ambient temperature (80 % remaining capacity from C_{10})
> Container made from high quality transparent or translucent plastics
> Also available in dry charged condition with separate electrolyte
> Low gassing (EN 50272-2) thanks to low antimony alloy: < 2% for cells; < 3% for blocks
> Designed in accordance with IEC 60896-11, DIN 40736 and DIN 40737 T3
> Electrolyte: diluted sulphuric acid d_N = 1.24 kg/l
> Manufactured in Europe in our ISO 9001 certified production plants

20 years design life

Nominal capacity 50.0 – 3350 Ah (up to 12000 Ah on request)

Block battery / Single cell

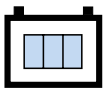
Tubular plate

Recyclable

Low maintenance

Classic OPzS

Technical data

Technical characteristics and data

Type acc. DIN 40 737 T3 blocks 40 736 T1 cells	Part number	Nom. voltage V	Nominal capacity C_{10} 1.80 Vpc 20 °C Ah	Length (l) max. mm	Width (b/w) max. mm	Height* (h1) max. mm	Installed length (B/L) mm	Weight incl. acid** approx. kg	Weight acid*** approx. kg	Internal resistance mOhm	Short circuit current A	Terminal	Pole pairs
6V 4 OPzS 200 LA	NVZS060200WC0FB	6	200	272	206	347	282	41.0	13.0	2.68	2283	F-M8	1
6V 5 OPzS 250 LA	NVZS060250WC0FB	6	250	380	206	347	392	56.0	20.0	2.39	2800	F-M8	1
6V 6 OPzS 300 LA	NVZS060300WC0FB	6	300	380	206	347	392	63.0	20.0	1.96	3106	F-M8	1
12V 1 OPzS 50 LA	NVZS120050WC0FB	12	50.0	272	206	347	282	34.0	15.0	18.1	688	F-M8	1
12V 2 OPzS 100 LA	NVZS120100WC0FB	12	100	272	206	347	282	43.0	14.0	9.26	1314	F-M8	1
12V 3 OPzS 150 LA	NVZS120150WC0FB	12	150	380	206	347	392	64.0	19.0	6.46	1884	F-M8	1
2 OPzS 100 LA	NVZS020100WC0FB	2	105	105	208	395	115	13.7	5.20	1.45	1400	F-M8	1
3 OPzS 150 LA	NVZS020150WC0FB	2	158	105	208	395	115	15.2	5.00	1.05	1950	F-M8	1
4 OPzS 200 LA	NVZS020200WC0FB	2	210	105	208	395	115	16.6	4.60	0.83	2450	F-M8	1
5 OPzS 250 LA	NVZS020250WC0FB	2	260	126	208	395	136	20.0	5.80	0.72	2850	F-M8	1
6 OPzS 300 LA	NVZS020300WC0FB	2	310	147	208	395	157	23.3	6.90	0.63	3250	F-M8	1
5 OPzS 350 LA	NVZS020350WC0FB	2	380	126	208	511	136	26.7	8.10	0.63	3250	F-M8	1
6 OPzS 420 LA	NVZS020420WC0FB	2	455	147	208	511	157	31.0	9.30	0.56	3650	F-M8	1
7 OPzS 490 LA	NVZS020490WC0FB	2	530	168	208	511	178	35.4	10.8	0.50	4100	F-M8	1
6 OPzS 600 LA	NVZS020600WC0FB	2	680	147	208	686	157	43.9	13.0	0.47	4350	F-M8	1
7 OPzS 700 LA	NVZS020700WC0FB	2	750	147	208	686	157	47.2	12.8	0.43	4800	F-M8	1
8 OPzS 800 LA	NVZS020800WC0FB	2	910	212	193	686	222	59.9	17.1	0.30	6800	F-M8	2
9 OPzS 900 LA	NVZS020900WC0FB	2	980	212	193	686	222	63.4	16.8	0.27	7500	F-M8	2
10 OPzS 1000 LA	NVZS021000WC0FB	2	1140	212	235	686	222	73.2	21.7	0.26	7900	F-M8	2
12 OPzS 1200 LA	NVZS021200WC0FB	2	1370	212	277	686	222	86.4	26.1	0.23	8900	F-M8	2
12 OPzS 1500 LA	NVZS021500WC0FB	2	1700	212	277	836	222	108	33.7	0.24	8500	F-M8	2
14 OPzS 1750 LA	NVZS021750WC0FB	2	1800	212	277	836	222	114	32.7	0.22	9300	F-M8	2
16 OPzS 2000 LA	NVZS022000WC0FA	2	2250	215	400	812	225	151	50.0	0.16	12800	F-M8	3
18 OPzS 2250 LA	NVZS022250WC0FA	2	2450	215	400	812	225	158	48.0	0.14	14600	F-M8	3
20 OPzS 2500 LA	NVZS022500WC0FA	2	2800	215	490	812	225	184	60.0	0.12	17000	F-M8	4
22 OPzS 2750 LA	NVZS022750WC0FA	2	3000	215	490	812	225	191	58.0	0.11	17800	F-M8	4
24 OPzS 3000 LA	NVZS023000WC0FA	2	3350	215	580	812	225	217	71.0	0.11	18600	F-M8	4

* Includes installed connector, the above mentioned height can differ depending on the used vent(s)
** Actual weight may differ by ±5%
*** Acid density d_N =1.24 kg/ l

Container, terminal and torque

> Container: PP blocks
SAN (Styrene acrylonitrile) cells

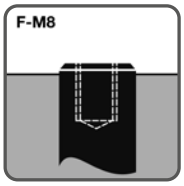

12 Nm for blocks;
20 Nm for cells

Data are also valid for dry charged version.
Change »**W**« (wet) to »**D**« (dry) in the part number. E.g.:
> filled and charged: NVZS120050 **W** C0FB
> dry charged: NVZS120050 **D** C0FB

Classic OPzS

Drawings

2 OPzS 100 LA - 7 OPzS 700 LA

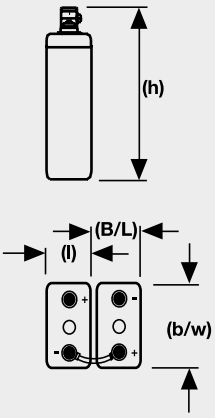

8 OPzS 800 LA - 14 OPzS 1750 LA

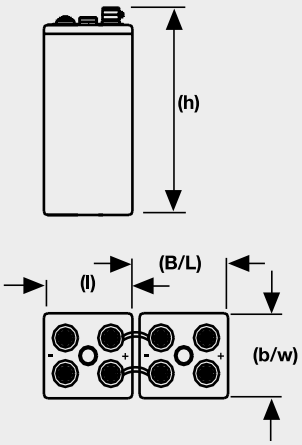

16 OPzS 2000 LA - 1 OPzS 2250 LA

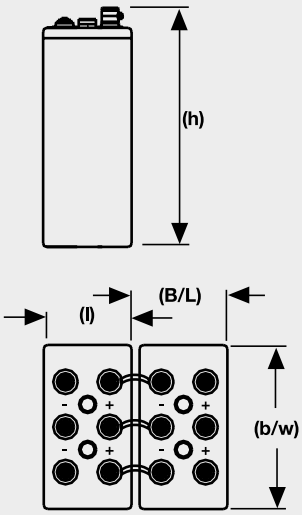

20 OPzS 2500 LA - 24 OPzS 3000 LA

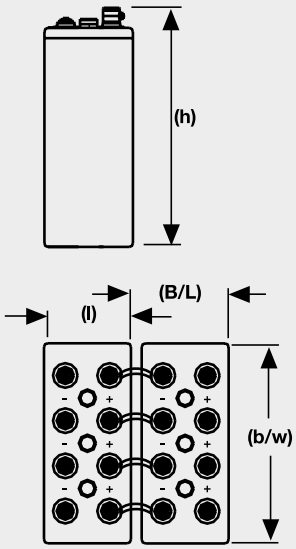

6V 4 OPzS 200 LA - 6V 6 OPzS 300 LA

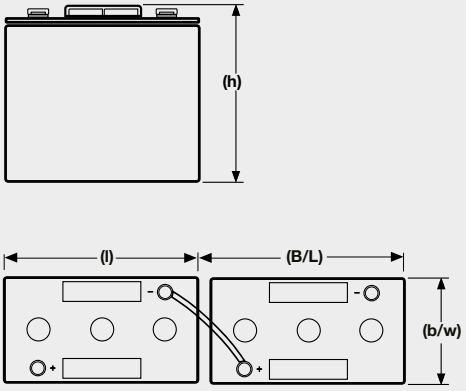

12V 1 OPzS 50 LA - 12V 3 OPzS 150 LA

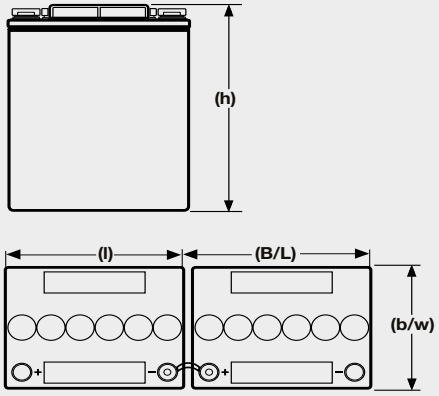

Not to scale!

Classic OPzS

Constant current discharge · OPzS blocks

1.90 Vpc – Discharge in A at 20 °C

Type	Part number	5 min	10 min	15 min	30 min	1 h	2 h	3 h	4 h	5 h	6 h	8 h	10 h
6V 4 OPzS 200 LA	NVZS060200WC0FB	120	105	96.0	85.0	62.0	46.0	35.3	30.0	26.7	24.1	19.8	16.1
6V 5 OPzS 250 LA	NVZS060250WC0FB	145	132	122	102	70.0	56.0	43.5	34.0	32.0	29.0	25.2	21.7
6V 6 OPzS 300 LA	NVZS060300WC0FB	160	147	136	118	91.0	66.0	53.0	45.3	39.0	34.0	28.0	24.5
12V 1 OPzS 50 LA	NVZS120050WC0FB	32.0	29.0	25.0	21.3	16.1	11.7	9.70	8.20	7.00	6.30	5.60	5.00
12V 2 OPzS 100 LA	NVZS120100WC0FB	66.5	58.0	52.2	41.5	31.5	24.5	17.4	15.0	13.7	12.5	10.6	8.90
12V 3 OPzS 150 LA	NVZS120150WC0FB	99.0	84.0	76.0	64.0	47.2	34.1	26.4	22.3	19.7	17.7	14.6	12.0

1.87 Vpc – Discharge in A at 20 °C

Type	Part number	5 min	10 min	15 min	30 min	1 h	2 h	3 h	4 h	5 h	6 h	8 h	10 h
6V 4 OPzS 200 LA	NVZS060200WC0FB	150	132	120	100	72.4	52.0	40.0	33.2	29.4	26.8	22.2	18.0
6V 5 OPzS 250 LA	NVZS060250WC0FB	180	161	140	118	88.7	63.2	50.0	42.0	36.7	33.4	28.1	23.3
6V 6 OPzS 300 LA	NVZS060300WC0FB	195	176	160	135	104	76.5	59.2	51.0	44.0	38.0	32.0	27.0
12V 1 OPzS 50 LA	NVZS120050WC0FB	40.0	35.0	31.0	25.5	19.4	13.6	11.2	9.30	8.20	7.20	6.00	5.50
12V 2 OPzS 100 LA	NVZS120100WC0FB	80.0	70.0	62.0	50.0	37.9	27.2	19.9	16.9	15.2	13.7	11.5	9.50
12V 3 OPzS 150 LA	NVZS120150WC0FB	120	102	90.0	75.0	55.0	39.5	30.0	25.4	22.0	19.8	16.4	13.8

1.85 Vpc – Discharge in A at 20 °C

Type	Part number	5 min	10 min	15 min	30 min	1 h	2 h	3 h	4 h	5 h	6 h	8 h	10 h
6V 4 OPzS 200 LA	NVZS060200WC0FB	162	145	135	110	78.7	55.5	42.2	35.0	30.8	28.1	23.3	18.7
6V 5 OPzS 250 LA	NVZS060250WC0FB	193	175	155	126	93.4	67.0	52.5	44.5	38.2	35.1	29.3	23.7
6V 6 OPzS 300 LA	NVZS060300WC0FB	216	195	177	147	113.5	79.0	62.0	54.0	46.0	40.5	33.7	28.0
12V 1 OPzS 50 LA	NVZS120050WC0FB	44.0	39.0	35.0	28.2	21.0	14.2	11.7	9.80	8.50	7.50	6.30	5.60
12V 2 OPzS 100 LA	NVZS120100WC0FB	87.5	78.0	69.5	55.0	41.0	28.8	21.4	17.8	15.6	14.3	11.8	9.70
12V 3 OPzS 150 LA	NVZS120150WC0FB	130	112	102.5	81.0	59.8	42.0	31.5	27.1	23.0	20.7	17.1	14.2

1.83 Vpc – Discharge in A at 20 °C

Type	Part number	5 min	10 min	15 min	30 min	1 h	2 h	3 h	4 h	5 h	6 h	8 h	10 h
6V 4 OPzS 200 LA	NVZS060200WC0FB	175	158	150	120	85.0	59.1	44.5	36.7	32.3	29.2	24.0	19.5
6V 5 OPzS 250 LA	NVZS060250WC0FB	207	190	171	135	102	71.4	55.0	46.5	40.3	36.3	30.2	24.5
6V 6 OPzS 300 LA	NVZS060300WC0FB	237	213	195	160	123	85.7	66.3	56.5	48.3	42.5	34.8	29.0
12V 1 OPzS 50 LA	NVZS120050WC0FB	48.0	43.0	39.0	31.0	22.8	15.3	12.2	10.2	8.80	7.80	6.50	5.80
12V 2 OPzS 100 LA	NVZS120100WC0FB	95.0	85.0	77.0	60.0	44.0	30.6	22.8	18.6	16.1	14.6	12.1	10.0
12V 3 OPzS 150 LA	NVZS120150WC0FB	140	122	115	87.0	64.6	44.4	33.4	28.3	24.1	21.6	17.9	14.6

1.80 Vpc – Discharge in A at 20 °C

Type	Part number	5 min	10 min	15 min	30 min	1 h	2 h	3 h	4 h	5 h	6 h	8 h	10 h
6V 4 OPzS 200 LA	NVZS060200WC0FB	205	178	160	130	92.0	61.3	47.5	38.5	34.9	30.4	25.0	20.3
6V 5 OPzS 250 LA	NVZS060250WC0FB	240	212	190	150	110	74.5	59.2	49.0	42.8	37.8	31.2	25.5
6V 6 OPzS 300 LA	NVZS060300WC0FB	260	240	218	177	135	89.3	70.4	59.5	51.0	44.5	35.8	30.3
12V 1 OPzS 50 LA	NVZS120050WC0FB	57.0	49.0	44.0	34.0	25.2	17.1	13.5	11.0	9.50	8.20	6.90	5.90
12V 2 OPzS 100 LA	NVZS120100WC0FB	110	96.0	85.0	66.0	49.0	32.3	24.1	19.6	17.1	15.4	12.5	10.1
12V 3 OPzS 150 LA	NVZS120150WC0FB	160	135	120	95.0	70.4	47.1	36.0	29.8	25.7	22.7	18.6	15.0

Classic OPzS

Constant current discharge · OPzS blocks

1.75 Vpc – Discharge in A at 20 °C

Type	Part number	5 min	10 min	15 min	30 min	1 h	2 h	3 h	4 h	5 h	6 h	8 h	10 h
6V 4 OPzS 200 LA	NVZS060200WC0FB	235	206	185	140	97.9	66.0	51.0	40.5	35.8	31.2	25.7	20.4
6V 5 OPzS 250 LA	NVZS060250WC0FB	285	250	220	165	120	81.0	64.0	51.0	44.0	39.1	32.3	26.1
6V 6 OPzS 300 LA	NVZS060300WC0FB	340	295	260	200	143	98.3	76.7	62.0	52.5	45.8	36.8	30.6
12V 1 OPzS 50 LA	NVZS120050WC0FB	65.0	56.0	48.0	36.0	26.5	18.4	14.0	11.6	9.80	8.60	7.20	6.20
12V 2 OPzS 100 LA	NVZS120100WC0FB	125	109	95.0	71.0	51.3	34.0	25.9	20.8	18.2	16.2	13.0	10.2
12V 3 OPzS 150 LA	NVZS120150WC0FB	185	155	136	102	73.4	50.0	38.4	31.2	27.0	24.0	19.4	15.3

1.70 Vpc – Discharge in A at 20 °C

Type	Part number	5 min	10 min	15 min	30 min	1 h	2 h	3 h	4 h	5 h	6 h	8 h	10 h
6V 4 OPzS 200 LA	NVZS060200WC0FB	270	232	208	155	108	68.0	51.6	41.5	37.5	31.7	26.0	20.8
6V 5 OPzS 250 LA	NVZS060250WC0FB	340	287	255	183	131	84.0	65.4	52.3	45.0	40.1	33.0	26.5
6V 6 OPzS 300 LA	NVZS060300WC0FB	380	333	295	220	159	103	77.0	63.6	53.5	46.4	37.3	31.2
12V 1 OPzS 50 LA	NVZS120050WC0FB	75.0	62.0	54.0	39.0	27.3	18.5	14.4	11.8	10.0	8.70	7.30	6.30
12V 2 OPzS 100 LA	NVZS120100WC0FB	145	122	106	78.0	54.0	35.0	26.7	21.3	18.8	16.6	13.3	10.4
12V 3 OPzS 150 LA	NVZS120150WC0FB	210	174	155	115	79.3	52.0	38.6	32.0	28.2	24.8	19.9	15.6

1.67 Vpc – Discharge in A at 20 °C

Type	Part number	5 min	10 min	15 min	30 min	1 h	2 h	3 h	4 h	5 h	6 h	8 h	10 h
6V 4 OPzS 200 LA	NVZS060200WC0FB	293	247	219	160	111	68.5	52.5	41.8	36.1	32.0	26.1	21.0
6V 5 OPzS 250 LA	NVZS060250WC0FB	362	307	268	193	133	84.5	65.8	52.6	45.6	40.5	33.3	26.6
6V 6 OPzS 300 LA	NVZS060300WC0FB	417	355	315	231	163	105	78.0	64.1	54.0	46.6	37.5	31.3
12V 1 OPzS 50 LA	NVZS120050WC0FB	80.0	66.0	56.0	40.0	27.7	18.7	14.5	11.9	10.0	8.80	7.30	6.30
12V 2 OPzS 100 LA	NVZS120100WC0FB	156	130	111	81.0	55.0	35.3	26.8	21.6	18.9	16.8	13.4	10.4
12V 3 OPzS 150 LA	NVZS120150WC0FB	229	186	163	118	82.0	52.6	39.0	32.2	28.5	25.2	20.1	15.7

1.65 Vpc – Discharge in A at 20 °C

Type	Part number	5 min	10 min	15 min	30 min	1 h	2 h	3 h	4 h	5 h	6 h	8 h	10 h
6V 4 OPzS 200 LA	NVZS060200WC0FB	307	258	226	163	113	69.0	52.9	42.0	36.2	32.2	26.2	21.0
6V 5 OPzS 250 LA	NVZS060250WC0FB	380	320	278	189	135	85.0	66.0	52.8	46.0	40.8	33.4	26.6
6V 6 OPzS 300 LA	NVZS060300WC0FB	435	369	326	237	165	106	78.5	64.4	54.2	46.8	37.6	31.3
12V 1 OPzS 50 LA	NVZS120050WC0FB	83.0	68.0	58.0	41.0	27.9	18.8	14.5	11.9	10.0	8.80	7.30	6.30
12V 2 OPzS 100 LA	NVZS120100WC0FB	162	135	115	83.0	55.5	35.5	26.9	21.7	19.0	16.9	13.5	10.4
12V 3 OPzS 150 LA	NVZS120150WC0FB	240	193	168	120	83.0	53.0	39.2	32.4	28.6	25.5	20.2	15.7

Classic OPzS

Constant current discharge · OPzS cells

1.90 Vpc – Discharge in A at 20 °C

Type	Part number	3 min	10 min	15 min	20 min	30 min	1 h	1.5 h	2 h	3 h	4h	5 h	8 h	10 h	20 h
2 OPzS 100	NVZS020100WC0FB	53.5	53.3	51.0	47.9	45.1	36.9	31.1	27.0	21.3	17.7	15.3	11.0	8.98	4.96
3 OPzS 150	NVZS020150WC0FB	80.2	79.9	76.5	71.9	67.7	55.3	46.7	40.5	32.0	26.6	22.9	16.6	13.5	7.43
4 OPzS 200	NVZS020200WC0FB	106	106	102	95.9	90.3	73.8	62.2	54.0	42.7	35.4	30.5	22.1	18.0	9.9
5 OPzS 250	NVZS020250WC0FB	128	128	122	115	109	90.0	76.2	66.5	52.3	43.5	37.6	27.2	22.2	12.3
6 OPzS 300	NVZS020300WC0FB	148	148	142	134	127	105	90.0	78.9	61.7	51.3	44.5	32.2	26.5	14.6
5 OPzS 350	NVZS020350WC0FB	152	152	147	144	133	115	100	88	73.0	61.1	53.2	38.8	32.3	18.2
6 OPzS 420	NVZS020420WC0FB	175	175	169	166	154	134	118	104	87.4	73.1	63.7	46.4	38.7	21.8
7 OPzS 490	NVZS020490WC0FB	200	200	193	189	176	153	136	120	101	85.3	74.2	54.1	45.1	25.4
6 OPzS 600	NVZS020600WC0FB	228	227	223	214	200	174	155	141	117	101	91.1	68.0	57.8	32.6
7 OPzS 700	NVZS020700WC0FB	251	251	246	237	221	192	171	156	129	112	100	75.0	63.8	36.0
8 OPzS 800	NVZS020800WC0FB	322	322	311	304	282	248	216	193	159	138	123	91.0	77.4	43.7
9 OPzS 900	NVZS020900WC0FB	347	346	335	328	303	267	233	208	171	149	133	98.0	83.3	47.0
10 OPzS 1000	NVZS021000WC0FB	393	392	381	371	344	302	266	240	197	172	153	114	96.9	54.7
12 OPzS 1200	NVZS021200WC0FB	459	459	449	432	404	352	313	285	235	205	183	137	116	65.8
12 OPzS 1500	NVZS021500WC0FB	408	408	402	394	382	343	320	297	257	228	207	156	136	72.1
14 OPzS 1750	NVZS021750WC0FB	432	432	428	426	405	364	338	315	272	241	220	166	144	76.3
16 OPzS 2000	NVZS022000WC0FA	589	589	576	562	540	474	436	401	340	302	274	207	180	95.4
18 OPzS 2250	NVZS022250WC0FA	617	617	605	591	568	504	466	429	370	328	299	225	196	104
20 OPzS 2500	NVZS022500WC0FA	732	732	716	700	672	596	542	498	423	375	342	258	224	119
22 OPzS 2750	NVZS022750WC0FA	785	785	767	750	720	632	581	534	453	402	366	276	240	127
24 OPzS 3000	NVZS023000WC0FA	844	844	828	808	777	689	636	586	506	449	409	308	268	142

1.87 Vpc – Discharge in A at 20 °C

Type	Part number	3 min	10 min	15 min	20 min	30 min	1 h	1.5 h	2 h	3 h	4h	5 h	8 h	10 h	20 h
2 OPzS 100	NVZS020100WC0FB	66.2	65.5	61.4	57.8	52.7	41.4	34.5	29.6	23.3	19.1	16.3	11.6	9.67	5.20
3 OPzS 150	NVZS020150WC0FB	99.4	98.3	92.1	86.7	79.0	62.0	51.8	44.5	35.0	28.7	24.5	17.4	14.5	7.80
4 OPzS 200	NVZS020200WC0FB	132	131	122	115	105	82.7	69.1	59.3	46.6	38.3	32.7	23.3	19.3	10.4
5 OPzS 250	NVZS020250WC0FB	159	157	148	139	127	100	84.7	73.1	57.1	47.0	40.3	28.6	23.8	13.0
6 OPzS 300	NVZS020300WC0FB	185	182	171	162	149	118	100	86.7	67.4	55.4	47.8	34.0	28.4	15.4
5 OPzS 350	NVZS020350WC0FB	190	187	179	174	160	135	115	99.8	79.8	66.5	57.8	41.7	34.8	19.3
6 OPzS 420	NVZS020420WC0FB	216	214	206	200	186	156	135	118	95.6	79.7	69.2	50.0	41.7	23.1
7 OPzS 490	NVZS020490WC0FB	247	244	236	229	212	179	155	136	111	92.5	80.6	58.2	48.5	26.9
6 OPzS 600	NVZS020600WC0FB	279	276	267	257	239	206	181	162	130	111	99	72.9	62.3	34.5
7 OPzS 700	NVZS020700WC0FB	307	305	294	283	264	227	199	179	144	123	108	80.4	68.7	38.0
8 OPzS 800	NVZS020800WC0FB	403	396	377	364	336	289	251	222	178	152	134	98.1	83.4	46.1
9 OPzS 900	NVZS020900WC0FB	430	426	406	393	362	312	270	239	192	164	144	105	89.8	49.7
10 OPzS 1000	NVZS021000WC0FB	484	480	460	444	411	354	309	275	221	188	166	122	104	57.8
12 OPzS 1200	NVZS021200WC0FB	562	557	538	518	482	416	364	327	263	225	198	146	125	69.5
12 OPzS 1500	NVZS021500WC0FB	522	521	511	498	479	419	385	352	297	257	230	173	148	79.8
14 OPzS 1750	NVZS021750WC0FB	553	552	541	532	508	444	408	372	314	272	245	183	157	84.5
16 OPzS 2000	NVZS022000WC0FA	754	752	731	712	676	578	525	473	392	339	305	229	196	105
18 OPzS 2250	NVZS022250WC0FA	791	789	769	748	712	615	561	507	427	370	333	249	213	115
20 OPzS 2500	NVZS022500WC0FA	937	936	910	885	779	720	654	589	488	423	380	284	244	132
22 OPzS 2750	NVZS022750WC0FA	1005	1005	976	949	903	771	700	631	523	453	407	305	262	141
24 OPzS 3000	NVZS023000WC0FA	1080	1075	1050	1020	972	841	766	693	584	506	455	340	292	157

Classic OPzS

Constant current discharge · OPzS cells

1.85 Vpc – Discharge in A at 20 °C

Type	Part number	3 min	10 min	15 min	20 min	30 min	1 h	1.5 h	2 h	3 h	4h	5 h	8 h	10 h	20 h
2 OPzS 100	NVZS020100WC0FB	75.1	73.7	68.3	64.4	57.7	44.3	36.8	31.5	24.6	20	17	12.1	10.1	5.40
3 OPzS 150	NVZS020150WC0FB	112	110	102	96.6	86.6	66.5	55.2	47.2	36.9	30.2	25.7	18.1	15.2	8.10
4 OPzS 200	NVZS020200WC0FB	150	147	136	128	115	88.6	73.6	62.9	49.3	40.2	34.2	24.1	20.2	10.0
5 OPzS 250	NVZS020250WC0FB	181	177	164	155	140	108	90.3	77.5	60.3	49.4	42.1	29.7	25.0	13.0
6 OPzS 300	NVZS020300WC0FB	210	206	191	180	163	127	106	91.9	71.2	58.3	49.9	35.2	29.8	15.0
5 OPzS 350	NVZS020350WC0FB	215	211	201	194	178	147	124	107	84.4	70.2	60.8	43.7	36.5	20.0
6 OPzS 420	NVZS020420WC0FB	244	240	232	223	207	172	146	127	101	84.0	72.8	52.3	43.7	23.0
7 OPzS 490	NVZS020490WC0FB	279	274	264	255	236	196	168	146	117	98.1	84.8	61.0	50.9	27.0
6 OPzS 600	NVZS020600WC0FB	313	309	296	285	265	227	197	176	140	118	103	76.2	65.3	35.0
7 OPzS 700	NVZS020700WC0FB	345	341	327	315	292	251	218	195	154	130	114	84.0	72.0	39.0
8 OPzS 800	NVZS020800WC0FB	457	445	422	405	373	317	274	241	191	161	141	102	87.4	47.0
9 OPzS 900	NVZS020900WC0FB	486	480	454	436	401	342	296	259	205	173	151	110	94.1	51.0
10 OPzS 1000	NVZS021000WC0FB	546	538	513	493	456	389	338	299	237	199	175	128	109	59.0
12 OPzS 1200	NVZS021200WC0FB	631	623	597	575	534	459	398	356	282	237	208	153	131	71.0
12 OPzS 1500	NVZS021500WC0FB	599	596	583	568	544	469	428	388	323	277	246	184	156	85.0
14 OPzS 1750	NVZS021750WC0FB	635	632	617	602	576	497	454	410	342	293	261	194	166	90.0
16 OPzS 2000	NVZS022000WC0FA	865	861	835	811	768	648	585	522	427	366	326	243	207	112
18 OPzS 2250	NVZS022250WC0FA	908	903	878	853	808	688	623	559	465	399	355	265	225	122
20 OPzS 2500	NVZS022500WC0FA	1075	1070	1040	1010	956	806	728	649	532	456	406	302	258	140
22 OPzS 2750	NVZS022750WC0FA	1155	1150	1115	1080	1025	864	779	695	570	489	435	324	276	150
24 OPzS 3000	NVZS023000WC0FA	1240	1235	1200	1165	1100	942	852	764	636	546	486	362	308	167

1.83 Vpc – Discharge in A at 20 °C

Type	Part number	3 min	10 min	15 min	20 min	30 min	1 h	1.5 h	2 h	3 h	4h	5 h	8 h	10 h	20 h
2 OPzS 100	NVZS020100WC0FB	83.9	81.6	75.2	70.2	62.0	46.5	38.3	32.6	25.5	20.8	17.7	12.3	10.3	5.54
3 OPzS 150	NVZS020150WC0FB	125	122	112	105	93.0	69.7	57.4	48.9	38.3	31.2	26.5	18.4	15.4	8.32
4 OPzS 200	NVZS020200WC0FB	167	163	150	140	124	92.9	76.5	65.2	51.0	41.6	35.3	24.5	20.5	11.0
5 OPzS 250	NVZS020250WC0FB	203	196	181	169	150	113	93.9	80.4	62.5	51.0	43.5	30.2	25.4	13.0
6 OPzS 300	NVZS020300WC0FB	236	226	211	197	176	133	110	95.5	73.8	60.2	51.5	35.8	30.3	16.0
5 OPzS 350	NVZS020350WC0FB	238	232	221	212	193	157	131	112	87.9	72.6	62.5	44.5	37.1	20.0
6 OPzS 420	NVZS020420WC0FB	272	265	254	245	225	183	154	133	105	86.8	74.8	53.2	44.4	24.0
7 OPzS 490	NVZS020490WC0FB	310	302	290	279	257	209	177	153	122	102	87.1	62.0	51.7	28.0
6 OPzS 600	NVZS020600WC0FB	347	340	325	312	289	245	211	186	146	123	106	77.8	66.4	36.0
7 OPzS 700	NVZS020700WC0FB	382	375	358	344	318	270	233	206	161	135	117	85.8	73.2	40.0
8 OPzS 800	NVZS020800WC0FB	505	493	464	443	406	341	292	255	199	166	145	105	88.8	48.0
9 OPzS 900	NVZS020900WC0FB	540	531	500	477	437	367	314	275	214	179	156	113	95.6	52.0
10 OPzS 1000	NVZS021000WC0FB	605	594	563	539	497	419	360	316	247	207	180	131	111	61.0
12 OPzS 1200	NVZS021200WC0FB	698	686	654	629	582	494	426	376	295	247	214	156	133	73.0
12 OPzS 1500	NVZS021500WC0FB	673	668	652	633	602	513	465	418	343	292	258	191	162	88.0
14 OPzS 1750	NVZS021750WC0FB	713	708	691	671	638	543	493	442	364	310	274	201	172	93.0
16 OPzS 2000	NVZS022000WC0FA	973	966	934	904	850	708	634	562	454	387	342	252	214	116
18 OPzS 2250	NVZS022250WC0FA	1015	1010	982	951	894	752	677	602	495	421	373	275	233	127
20 OPzS 2500	NVZS022500WC0FA	1205	1200	1165	1125	1060	881	790	700	566	482	426	313	267	145
22 OPzS 2750	NVZS022750WC0FA	1295	1285	1245	1205	1135	944	846	750	606	516	457	336	286	156
24 OPzS 3000	NVZS023000WC0FA	1390	1380	1345	1300	1220	1030	924	825	675	575	510	375	319	174

Classic OPzS

Constant current discharge · OPzS cells

1.80 Vpc – Discharge in A at 20 °C

Type	Part number	3 min	10 min	15 min	20 min	30 min	1 h	1.5 h	2 h	3 h	4h	5 h	8 h	10 h	20 h
2 OPzS 100	NVZS020100WC0FB	97.6	93.5	85.5	78.9	68.5	49.7	40.5	34.3	26.8	21.8	18.4	12.6	10.5	5.79
3 OPzS 150	NVZS020150WC0FB	146	140	128	118	102	74.5	60.7	51.4	40.2	32.7	27.7	18.8	15.8	8.68
4 OPzS 200	NVZS020200WC0FB	195	186	171	157	137	99.3	81.0	68.6	53.6	43.6	36.9	25.1	21.0	11.6
5 OPzS 250	NVZS020250WC0FB	236	225	206	191	166	121	99.5	84.7	65.6	53.5	45.4	31.0	26.0	14.3
6 OPzS 300	NVZS020300WC0FB	275	262	240	222	195	142	117	100	77.5	63.1	53.9	36.7	31.0	17.1
5 OPzS 350	NVZS020350WC0FB	273	264	251	240	216	172	141	120	93.0	76.2	65.0	45.6	38.0	20.9
6 OPzS 420	NVZS020420WC0FB	314	303	288	276	251	200	166	142	111	90.9	77.8	54.6	45.5	25.0
7 OPzS 490	NVZS020490WC0FB	358	345	329	315	287	228	191	164	129	106	90.6	63.6	53.0	29.2
6 OPzS 600	NVZS020600WC0FB	398	387	367	352	325	271	231	202	156	129	111	80.2	68.0	37.4
7 OPzS 700	NVZS020700WC0FB	439	427	405	388	358	299	255	222	172	144	123	88.5	75.0	41.3
8 OPzS 800	NVZS020800WC0FB	572	564	527	500	456	377	318	276	211	175	152	108	91.0	50.1
9 OPzS 900	NVZS020900WC0FB	623	607	568	539	492	406	343	297	227	188	163	116	98.0	53.9
10 OPzS 1000	NVZS021000WC0FB	695	678	639	608	558	464	393	342	263	218	188	135	114	62.7
12 OPzS 1200	NVZS021200WC0FB	800	780	741	709	654	546	467	406	315	261	224	161	137	75.4
12 OPzS 1500	NVZS021500WC0FB	785	777	756	731	690	578	520	462	374	316	277	201	170	93.2
14 OPzS 1750	NVZS021750WC0FB	831	823	801	774	731	612	551	490	396	334	293	212	180	98.6
16 OPzS 2000	NVZS022000WC0FA	1135	1125	1080	1040	974	798	709	622	495	418	367	265	225	123
18 OPzS 2250	NVZS022250WC0FA	1185	1175	1140	1095	1025	848	757	666	539	455	399	289	245	134
20 OPzS 2500	NVZS022500WC0FA	1390	1375	1345	1300	1210	993	884	775	616	520	456	330	280	153
22 OPzS 2750	NVZS022750WC0FA	1510	1495	1445	1390	1300	1065	946	830	660	557	489	354	300	164
24 OPzS 3000	NVZS023000WC0FA	1620	1605	1555	1500	1400	1160	1035	911	737	622	546	395	335	184

1.75 Vpc – Discharge in A at 20 °C

Type	Part number	3 min	10 min	15 min	20 min	30 min	1 h	1.5 h	2 h	3 h	4h	5 h	8 h	10 h	20 h
2 OPzS 100	NVZS020100WC0FB	119	111	100	91.2	77.7	53.7	42.8	36.1	28.0	22.7	19.2	13.1	10.8	5.94
3 OPzS 150	NVZS020150WC0FB	178	166	151	136	116	80.5	64.2	54.1	42.0	34.1	28.8	19.7	16.3	8.91
4 OPzS 200	NVZS020200WC0FB	238	222	201	182	155	107	85.6	72.1	56.0	45.4	38.4	26.2	21.7	11.9
5 OPzS 250	NVZS020250WC0FB	288	268	244	220	189	131	105	89.1	68.7	55.7	47.2	32.3	26.8	14.7
6 OPzS 300	NVZS020300WC0FB	336	313	284	257	221	154	124	106	81.0	65.7	56.0	38.3	32.0	17.5
5 OPzS 350	NVZS020350WC0FB	333	316	296	280	247	189	153	128	97.3	79.7	68.0	47.1	39.1	21.5
6 OPzS 420	NVZS020420WC0FB	383	364	341	323	287	220	179	152	116	95.0	81.4	56.4	46.9	25.7
7 OPzS 490	NVZS020490WC0FB	438	415	389	368	328	251	207	175	135	111	94.9	65.7	54.6	29.9
6 OPzS 600	NVZS020600WC0FB	480	462	437	416	380	306	258	219	166	136	115	83.0	70.0	38.4
7 OPzS 700	NVZS020700WC0FB	530	510	482	459	420	337	285	242	183	150	127	91.5	77.3	42.4
8 OPzS 800	NVZS020800WC0FB	703	677	629	591	534	429	353	303	225	184	157	111	92.8	51.4
9 OPzS 900	NVZS020900WC0FB	758	729	678	637	575	462	380	326	243	198	169	120	100	55.4
10 OPzS 1000	NVZS021000WC0FB	843	812	761	719	653	525	437	373	281	229	195	139	116	64.4
12 OPzS 1200	NVZS021200WC0FB	968	931	880	838	767	616	520	442	335	273	232	167	141	77.4
12 OPzS 1500	NVZS021500WC0FB	966	952	923	884	824	676	598	524	413	346	301	212	178	97.0
14 OPzS 1750	NVZS021750WC0FB	1025	1010	977	936	873	716	634	554	437	366	319	225	188	103
16 OPzS 2000	NVZS022000WC0FA	1395	1375	1320	1260	1165	933	817	705	547	458	398	281	235	129
18 OPzS 2250	NVZS022250WC0FA	1460	1440	1390	1325	1225	993	871	755	595	498	434	306	256	141
20 OPzS 2500	NVZS022500WC0FA	1735	1710	1645	1565	1450	1165	1015	877	680	569	496	350	293	161
22 OPzS 2750	NVZS022750WC0FA	1855	1830	1765	1680	1550	1245	1090	940	729	610	531	375	313	172
24 OPzS 3000	NVZS023000WC0FA	2000	1970	1900	1810	1675	1360	1190	1030	814	681	593	419	350	192

Classic OPzS

Constant current discharge · OPzS cells

1.70 Vpc – Discharge in A at 20 °C

Type	Part number	3 min	10 min	15 min	20 min	30 min	1 h	1.5 h	2 h	3 h	4h	5 h	8 h	10 h	20 h
2 OPzS 100	NVZS020100WC0FB	139	126	112	101	84.5	56.4	44.3	36.9	28.8	23.2	19.5	13.2	10.9	5.99
3 OPzS 150	NVZS020150WC0FB	209	189	168	151	126	84.6	66.5	55.3	43.1	34.8	29.2	19.8	16.4	8.98
4 OPzS 200	NVZS020200WC0FB	278	253	225	202	168	112	88.6	73.8	57.5	46.4	39.0	26.4	21.9	11.0
5 OPzS 250	NVZS020250WC0FB	337	307	272	245	206	138	109	91.2	70.4	56.8	48.0	32.5	27.1	14.0
6 OPzS 300	NVZS020300WC0FB	395	358	318	286	241	163	129	108	83.2	67.1	56.9	38.6	32.3	17.0
5 OPzS 350	NVZS020350WC0FB	394	367	339	316	274	202	160	133	100	81.4	69.2	47.1	39.9	22.0
6 OPzS 420	NVZS020420WC0FB	453	423	390	364	318	235	188	158	120	97.7	82.8	57.8	47.8	26.0
7 OPzS 490	NVZS020490WC0FB	517	483	445	415	363	268	217	182	139	114	96.5	67.3	55.7	30.0
6 OPzS 600	NVZS020600WC0FB	562	535	506	478	433	336	278	232	173	139	117	84.3	70.7	39.0
7 OPzS 700	NVZS020700WC0FB	619	590	558	528	477	371	307	256	191	154	129	93.0	78.0	43.0
8 OPzS 800	NVZS020800WC0FB	824	785	728	678	606	471	379	322	236	190	160	113	94.6	52.0
9 OPzS 900	NVZS020900WC0FB	888	845	784	730	652	507	408	346	254	204	172	122	101	56.0
10 OPzS 1000	NVZS021000WC0FB	988	940	880	825	742	577	471	396	293	237	198	141	118	65.0
12 OPzS 1200	NVZS021200WC0FB	1135	1080	1020	964	872	678	561	468	349	281	237	169	142	78.0
12 OPzS 1500	NVZS021500WC0FB	1145	1125	1085	1030	950	768	665	573	442	367	318	219	182	100
14 OPzS 1750	NVZS021750WC0FB	1215	1190	1150	1090	1005	814	704	607	468	389	337	232	193	106
16 OPzS 2000	NVZS022000WC0FA	1655	1625	1555	1470	1345	1060	907	771	585	486	421	290	241	132
18 OPzS 2250	NVZS022250WC0FA	1735	1700	1635	1545	1410	1125	968	826	637	529	458	316	262	144
20 OPzS 2500	NVZS022500WC0FA	2060	2020	1930	1830	1670	1320	1130	960	728	605	524	361	300	165
22 OPzS 2750	NVZS022750WC0FA	2205	2165	2070	1960	1785	1415	1210	1025	780	648	561	387	321	176
24 OPzS 3000	NVZS023000WC0FA	2375	2330	2230	2115	1930	1540	1325	1130	871	723	626	432	358	197

1.65 Vpc – Discharge in A at 20 °C

Type	Part number	3 min	10 min	15 min	20 min	30 min	1 h	1.5 h	2 h	3 h	4h	5 h	8 h	10 h	20 h
2 OPzS 100	NVZS020100WC0FB	157	140	122	108	89.3	58.0	45.1	37.5	29.1	23.4	19.6	13.2	10.9	5.99
3 OPzS 150	NVZS020150WC0FB	236	210	183	163	134	87.0	67.7	56.2	43.7	35.0	29.4	19.8	16.4	8.98
4 OPzS 200	NVZS020200WC0FB	315	280	244	217	178	115	90.3	75.0	58.3	46.7	39.2	26.4	21.9	11.0
5 OPzS 250	NVZS020250WC0FB	384	341	297	264	218	142	111	92.8	71.4	57.2	48.3	32.5	27.1	14.0
6 OPzS 300	NVZS020300WC0FB	449	399	347	309	256	168	131	110	84.4	67.5	57.2	38.6	32.3	17.0
5 OPzS 350	NVZS020350WC0FB	454	417	379	349	297	211	166	137	102	82.9	69.5	47.1	39.9	22.0
6 OPzS 420	NVZS020420WC0FB	522	480	436	401	345	245	195	162	122	99.1	83.3	57.8	47.8	26.0
7 OPzS 490	NVZS020490WC0FB	596	548	498	458	394	280	225	187	143	115	97.0	67.3	55.7	30.0
6 OPzS 600	NVZS020600WC0FB	643	605	576	540	482	363	293	243	177	141	119	86.4	71.4	39.0
7 OPzS 700	NVZS020700WC0FB	710	667	635	596	531	401	324	268	195	156	131	95.3	78.8	43.0
8 OPzS 800	NVZS020800WC0FB	945	890	823	759	673	502	399	334	243	194	162	115	95.6	52.0
9 OPzS 900	NVZS020900WC0FB	1015	958	886	818	725	541	430	360	262	209	174	124	102	56.0
10 OPzS 1000	NVZS021000WC0FB	1130	1064	998	929	825	619	496	413	301	241	201	144	119	66.0
12 OPzS 1200	NVZS021200WC0FB	1295	1220	1160	1090	971	733	591	490	357	286	239	174	143	79.0
12 OPzS 1500	NVZS021500WC0FB	1330	1300	1240	1175	1070	853	721	612	462	382	330	223	184	101
14 OPzS 1750	NVZS021750WC0FB	1410	1375	1315	1245	1135	904	763	648	490	405	349	236	194	107
16 OPzS 2000	NVZS022000WC0FA	1920	1875	1775	1675	1510	1180	984	824	612	506	436	295	243	133
18 OPzS 2250	NVZS022250WC0FA	2015	1965	1870	1765	1590	1250	1050	882	666	550	475	321	265	145
20 OPzS 2500	NVZS022500WC0FA	2390	2335	2215	2090	1885	1465	1220	1025	762	630	543	367	302	166
22 OPzS 2750	NVZS022750WC0FA	2555	2495	2370	2235	2015	1570	1310	1100	815	674	582	393	324	178
24 OPzS 3000	NVZS023000WC0FA	2755	2690	2555	2415	2175	1710	1435	1205	911	753	650	439	362	199

Classic OPzS

Constant current discharge · OPzS cells

1.60 Vpc – Discharge in A at 20 °C

Type	Part number	3 min	10 min	15 min	20 min	30 min	1 h	1.5 h	2 h	3 h	4h	5 h	8 h	10 h	20 h
2 OPzS 100	NVZS020100WC0FB	174	151	131	115	93.4	59.3	45.5	37.9	29.4	23.4	19.7	13.2	10.9	5.99
3 OPzS 150	NVZS020150WC0FB	261	227	196	173	140	88.9	68.3	56.9	44.1	35.1	29.5	19.8	16.4	8.98
4 OPzS 200	NVZS020200WC0FB	348	303	262	230	186	118	91.1	75.9	58.8	46.8	39.4	26.4	21.9	11.0
5 OPzS 250	NVZS020250WC0FB	425	369	319	280	227	145	112	93.9	72.0	57.5	48.5	32.5	27.1	14.0
6 OPzS 300	NVZS020300WC0FB	498	433	373	328	267	172	133	111	85.0	68.0	57.5	38.6	32.3	17.0
5 OPzS 350	NVZS020350WC0FB	515	465	417	377	318	217	170	138	104	83.4	69.9	47.1	39.9	22.0
6 OPzS 420	NVZS020420WC0FB	592	536	480	434	370	252	200	164	125	99.3	83.7	57.8	47.8	26.0
7 OPzS 490	NVZS020490WC0FB	676	611	549	496	422	288	230	189	145	116	97.5	67.3	55.7	30.0
6 OPzS 600	NVZS020600WC0FB	723	673	645	602	528	387	304	252	178	142	119	86.4	71.4	39.0
7 OPzS 700	NVZS020700WC0FB	799	742	711	664	582	427	336	278	197	156	131	95.3	78.8	43.0
8 OPzS 800	NVZS020800WC0FB	1065	991	917	837	737	524	415	342	247	195	162	115	95.6	52.0
9 OPzS 900	NVZS020900WC0FB	1150	1070	987	901	793	564	447	368	266	211	174	124	102	56.0
10 OPzS 1000	NVZS021000WC0FB	1270	1185	1115	1030	904	653	515	425	305	242	201	144	119	66.0
12 OPzS 1200	NVZS021200WC0FB	1455	1355	1300	1215	1065	780	613	508	360	286	239	174	143	79.0
12 OPzS 1500	NVZS021500WC0FB	1515	1470	1395	1320	1190	933	767	642	476	391	337	224	184	101
14 OPzS 1750	NVZS021750WC0FB	1605	1560	1475	1395	1260	988	812	680	504	414	356	238	194	107
16 OPzS 2000	NVZS022000WC0FA	2185	2125	1995	1880	1680	1290	1045	864	630	518	445	297	243	133
18 OPzS 2250	NVZS022250WC0FA	2290	2225	2100	1975	1765	1370	1115	926	686	564	485	323	265	145
20 OPzS 2500	NVZS022500WC0FA	2725	2645	2485	2340	2090	1600	1305	1080	784	645	554	370	302	166
22 OPzS 2750	NVZS022750WC0FA	2920	2835	2660	2510	2240	1715	1395	1155	840	690	594	396	324	178
24 OPzS 3000	NVZS023000WC0FA	3135	3045	2870	2705	2415	1875	1525	1265	938	771	663	442	362	199

Classic OPzS

Constant power discharge · OPzS cells

1.90 Vpc – Discharge in W at 20 °C

Type	Part number	3 min	10 min	15 min	20 min	30 min	1 h	1.5 h	2 h	3 h	4h	5 h	8 h	10 h	20 h
2 OPzS 100	NVZS020100WC0FB	102	101	97.4	91.5	86.5	71.1	60.0	52.2	41.5	34.5	29.9	21.7	17.7	9.91
3 OPzS 150	NVZS020150WC0FB	153	152	145	137	129	106	90.1	78.4	62.2	51.8	44.9	32.6	26.6	14.9
4 OPzS 200	NVZS020200WC0FB	203	202	194	183	172	141	120	104	82.9	69.1	59.8	43.5	35.4	19.7
5 OPzS 250	NVZS020250WC0FB	244	244	234	220	209	173	147	128	101	84.8	73.7	53.6	43.9	24.4
6 OPzS 300	NVZS020300WC0FB	282	282	272	256	244	203	173	152	119	100	87.4	63.6	52.3	29.1
5 OPzS 350	NVZS020350WC0FB	290	289	280	275	254	222	194	170	141	119	104	76.5	63.9	36.4
6 OPzS 420	NVZS020420WC0FB	334	333	322	317	296	258	228	202	169	142	124	91.6	76.5	43.6
7 OPzS 490	NVZS020490WC0FB	381	380	368	362	338	295	263	233	197	166	145	106	89.1	50.8
6 OPzS 600	NVZS020600WC0FB	434	434	425	410	384	336	300	273	227	197	178	134	114	65.1
7 OPzS 700	NVZS020700WC0FB	479	478	469	452	423	371	331	301	250	218	197	148	126	71.8
8 OPzS 800	NVZS020800WC0FB	614	613	593	582	540	478	418	375	309	269	242	179	152	87.1
9 OPzS 900	NVZS020900WC0FB	661	660	639	627	581	515	450	403	333	290	261	193	164	93.8
10 OPzS 1000	NVZS021000WC0FB	748	748	728	708	660	581	513	464	384	335	301	224	191	109
12 OPzS 1200	NVZS021200WC0FB	874	874	857	826	773	677	605	551	458	400	360	270	230	131
12 OPzS 1500	NVZS021500WC0FB	775	775	764	749	728	655	615	570	496	441	403	306	268	143
14 OPzS 1750	NVZS021750WC0FB	821	821	813	809	772	695	645	605	525	466	428	325	284	151
16 OPzS 2000	NVZS022000WC0FA	1120	1120	1095	1070	1030	905	836	770	656	584	533	406	355	189
18 OPzS 2250	NVZS022250WC0FA	1170	1170	1150	1125	1080	965	890	824	714	635	582	441	386	206
20 OPzS 2500	NVZS022500WC0FA	1390	1390	1360	1330	1280	1140	1040	956	816	726	665	506	441	236
22 OPzS 2750	NVZS022750WC0FA	1490	1490	1455	1425	1370	1205	1115	1025	874	778	712	541	473	252
24 OPzS 3000	NVZS023000WC0FA	1605	1605	1575	1535	1480	1315	1220	1125	977	869	795	604	528	282

1.87 Vpc – Discharge in W at 20 °C

Type	Part number	3 min	10 min	15 min	20 min	30 min	1 h	1.5 h	2 h	3 h	4h	5 h	8 h	10 h	20 h
2 OPzS 100	NVZS020100WC0FB	123	122	115	108	99.4	78.5	65.9	56.7	44.8	37.1	31.9	22.8	19.0	10.4
3 OPzS 150	NVZS020150WC0FB	185	184	173	163	149	117	98.8	85.1	67.4	55.7	47.7	34.3	28.6	15.4
4 OPzS 200	NVZS020200WC0FB	247	245	230	217	198	157	131	113	89.8	74.2	63.8	45.6	37.9	20.7
5 OPzS 250	NVZS020250WC0FB	298	295	278	262	241	191	161	139	109	91.1	78.5	56.2	46.9	25.7
6 OPzS 300	NVZS020300WC0FB	346	343	323	305	282	225	190	165	129	106	93.1	66.7	55.9	30.6
5 OPzS 350	NVZS020350WC0FB	355	351	337	328	302	256	219	191	153	128	112	81.8	68.4	38.3
6 OPzS 420	NVZS020420WC0FB	404	401	388	377	351	298	257	226	184	154	134	98.0	81.9	45.8
7 OPzS 490	NVZS020490WC0FB	462	458	443	431	401	340	296	261	214	179	156	114	95.4	53.4
6 OPzS 600	NVZS020600WC0FB	521	518	501	484	451	392	345	311	251	215	191	143	122	68.5
7 OPzS 700	NVZS020700WC0FB	574	572	553	533	498	432	380	343	277	238	211	157	135	75.5
8 OPzS 800	NVZS020800WC0FB	753	743	709	686	635	550	479	425	343	294	261	192	163	91.6
9 OPzS 900	NVZS020900WC0FB	804	800	764	739	684	593	516	457	369	317	281	207	176	98.7
10 OPzS 1000	NVZS021000WC0FB	905	899	865	835	776	673	589	527	426	364	324	240	205	114
12 OPzS 1200	NVZS021200WC0FB	1050	1045	1010	975	909	790	695	627	507	435	386	288	246	137
12 OPzS 1500	NVZS021500WC0FB	976	974	956	931	838	788	726	665	566	492	443	336	290	158
14 OPzS 1750	NVZS021750WC0FB	1030	1030	1010	995	889	835	769	703	598	521	472	356	308	167
16 OPzS 2000	NVZS022000WC0FA	1410	1405	1365	1330	1185	1085	990	894	745	649	587	445	384	208
18 OPzS 2250	NVZS022250WC0FA	1480	1475	1440	1400	1245	1155	1055	958	813	708	641	484	417	228
20 OPzS 2500	NVZS022500WC0FA	1755	1750	1700	1665	1365	1355	1235	1115	930	810	731	552	478	261
22 OPzS 2750	NVZS022750WC0FA	1885	1880	1825	1775	1580	1450	1320	1195	996	867	783	593	514	279
24 OPzS 3000	NVZS023000WC0FA	2020	2010	1965	1905	1700	1580	1445	1310	1110	969	876	661	572	311

Classic OPzS

Constant power discharge · OPzS cells

1.85 Vpc – Discharge in W at 20 °C

Type	Part number	3 min	10 min	15 min	20 min	30 min	1 h	1.5 h	2 h	3 h	4h	5 h	8 h	10 h	20 h
2 OPzS 100	NVZS020100WC0FB	138	137	127	120	108	83.6	69.7	59.8	47.1	38.8	33.2	23.6	19.7	10.6
3 OPzS 150	NVZS020150WC0FB	207	205	190	180	162	125	104	89.8	70.8	58.2	49.8	35.4	29.7	16.0
4 OPzS 200	NVZS020200WC0FB	277	274	254	240	216	167	139	119	94.3	77.6	66.3	47.1	39.5	21.4
5 OPzS 250	NVZS020250WC0FB	335	330	307	290	262	204	170	147	115	95.3	81.7	58.0	49.0	26.5
6 OPzS 300	NVZS020300WC0FB	389	383	357	337	307	239	201	174	136	111	96.9	68.9	58.4	31.6
5 OPzS 350	NVZS020350WC0FB	397	392	375	363	334	279	235	204	161	135	118	85.4	71.5	39.5
6 OPzS 420	NVZS020420WC0FB	451	446	432	417	388	324	276	242	193	162	141	102	85.6	47.3
7 OPzS 490	NVZS020490WC0FB	516	510	493	477	443	370	319	279	225	189	164	119	99.7	55.1
6 OPzS 600	NVZS020600WC0FB	579	575	552	533	496	429	374	336	268	227	200	148	127	70.7
7 OPzS 700	NVZS020700WC0FB	638	634	609	588	547	473	413	370	295	250	221	164	141	78.0
8 OPzS 800	NVZS020800WC0FB	845	829	787	756	698	599	520	458	366	310	273	200	171	94.6
9 OPzS 900	NVZS020900WC0FB	899	893	847	814	752	645	560	493	394	333	294	216	184	101
10 OPzS 1000	NVZS021000WC0FB	1010	1000	956	920	854	735	640	569	454	383	339	250	214	118
12 OPzS 1200	NVZS021200WC0FB	1170	1160	1115	1075	1000	865	755	677	540	456	404	299	257	142
12 OPzS 1500	NVZS021500WC0FB	1110	1105	1080	1055	1010	875	801	728	612	526	471	356	304	167
14 OPzS 1750	NVZS021750WC0FB	1175	1170	1145	1115	1070	927	850	770	648	557	500	375	324	177
16 OPzS 2000	NVZS022000WC0FA	1600	1595	1550	1505	1430	1210	1095	980	809	695	624	470	404	221
18 OPzS 2250	NVZS022250WC0FA	1675	1670	1630	1580	1505	1285	1165	1050	881	758	680	513	439	240
20 OPzS 2500	NVZS022500WC0FA	1990	1980	1930	1875	1780	1505	1365	1220	1010	866	777	584	503	276
22 OPzS 2750	NVZS022750WC0FA	2140	2130	2070	2005	1905	1610	1460	1305	1080	929	833	627	538	295
24 OPzS 3000	NVZS023000WC0FA	2295	2285	2225	2165	2045	1755	1595	1435	1205	1035	931	700	601	329

1.83 Vpc – Discharge in W at 20 °C

Type	Part number	3 min	10 min	15 min	20 min	30 min	1 h	1.5 h	2 h	3 h	4h	5 h	8 h	10 h	20 h
2 OPzS 100	NVZS020100WC0FB	153	150	138	129	114	87.0	72.0	61.7	48.7	40.0	34.2	23.9	19.9	11.0
3 OPzS 150	NVZS020150WC0FB	230	225	208	194	172	130	108	92.4	73.0	59.9	51.3	36.0	30.1	16.4
4 OPzS 200	NVZS020200WC0FB	307	300	277	259	230	173	144	123	97.2	79.9	68.2	47.8	40.1	22.0
5 OPzS 250	NVZS020250WC0FB	372	362	335	313	279	212	176	152	119	97.9	84.0	58.9	49.6	27.2
6 OPzS 300	NVZS020300WC0FB	433	420	389	365	327	249	209	180	140	115	99.7	69.8	59.2	32.4
5 OPzS 350	NVZS020350WC0FB	435	427	408	393	359	295	247	213	167	139	120	86.6	72.4	40.2
6 OPzS 420	NVZS020420WC0FB	497	488	470	452	417	343	290	252	200	167	144	103	86.7	48.1
7 OPzS 490	NVZS020490WC0FB	567	557	536	516	476	391	334	291	233	196	168	120	101	56.0
6 OPzS 600	NVZS020600WC0FB	635	626	599	577	536	459	398	353	279	235	206	151	129	71.9
7 OPzS 700	NVZS020700WC0FB	699	691	661	636	591	506	439	390	308	258	227	167	143	79.3
8 OPzS 800	NVZS020800WC0FB	918	907	856	819	754	639	550	483	379	318	281	204	173	96.2
9 OPzS 900	NVZS020900WC0FB	988	977	922	882	812	688	592	520	408	343	302	220	186	103
10 OPzS 1000	NVZS021000WC0FB	1105	1095	1040	996	922	785	678	599	472	396	348	255	217	120
12 OPzS 1200	NVZS021200WC0FB	1275	1265	1210	1165	1080	925	802	712	563	473	415	305	261	144
12 OPzS 1500	NVZS021500WC0FB	1225	1220	1195	1165	1110	949	863	778	647	552	491	368	314	173
14 OPzS 1750	NVZS021750WC0FB	1300	1295	1270	1235	1175	1005	915	823	686	586	522	387	334	183
16 OPzS 2000	NVZS022000WC0FA	1780	1770	1715	1665	1570	1310	1175	1045	856	731	651	485	415	227
18 OPzS 2250	NVZS022250WC0FA	1860	1850	1800	1750	1650	1390	1255	1120	933	796	711	529	452	249
20 OPzS 2500	NVZS022500WC0FA	2205	2195	2140	2070	1955	1630	1465	1305	1066	911	812	603	518	284
22 OPzS 2750	NVZS022750WC0FA	2365	2350	2285	2215	2095	1745	1570	1395	1140	975	871	647	555	306
24 OPzS 3000	NVZS023000WC0FA	2540	2525	2470	2390	2250	1905	1715	1535	1270	1085	972	722	619	341

Classic OPzS

Constant power discharge · OPzS cells

1.80 Vpc – Discharge in W at 20 °C

Type	Part number	3 min	10 min	15 min	20 min	30 min	1 h	1.5 h	2 h	3 h	4h	5 h	8 h	10 h	20 h
2 OPzS 100	NVZS020100WC0FB	176	169	155	143	125	92.0	75.7	64.5	50.8	41.6	35.5	24.3	20.3	11.4
3 OPzS 150	NVZS020150WC0FB	263	254	233	215	188	138	113	96.8	76.2	62.4	53.3	36.7	30.8	17.2
4 OPzS 200	NVZS020200WC0FB	352	339	311	288	251	184	151	129	101	83.2	70.9	48.8	40.9	22.8
5 OPzS 250	NVZS020250WC0FB	426	409	376	348	305	225	185	159	124	102	87.4	60.0	50.6	28.2
6 OPzS 300	NVZS020300WC0FB	497	476	438	406	357	264	219	189	146	120	103	71.2	60.3	33.6
5 OPzS 350	NVZS020350WC0FB	492	479	457	438	396	319	264	225	176	145	125	88.5	73.9	41.2
6 OPzS 420	NVZS020420WC0FB	566	550	526	504	461	371	310	267	211	174	149	105	88.5	49.3
7 OPzS 490	NVZS020490WC0FB	646	627	600	576	526	423	358	308	246	203	174	123	103	57.4
6 OPzS 600	NVZS020600WC0FB	718	703	669	642	595	503	433	379	296	246	214	155	132	73.7
7 OPzS 700	NVZS020700WC0FB	792	775	738	709	657	554	478	418	326	274	236	171	145	81.3
8 OPzS 800	NVZS020800WC0FB	1040	1025	961	913	837	700	595	520	400	333	292	210	177	98.6
9 OPzS 900	NVZS020900WC0FB	1120	1105	1035	983	901	754	641	560	430	358	314	226	190	106
10 OPzS 1000	NVZS021000WC0FB	1250	1230	1165	1110	1025	860	736	644	499	415	363	262	221	123
12 OPzS 1200	NVZS021200WC0FB	1440	1415	1349	1295	1200	1015	873	765	597	497	432	313	266	148
12 OPzS 1500	NVZS021500WC0FB	1410	1400	1370	1330	1260	1060	957	854	699	594	525	385	328	182
14 OPzS 1750	NVZS021750WC0FB	1495	1485	1450	1410	1335	1120	1015	905	740	628	555	406	347	192
16 OPzS 2000	NVZS022000WC0FA	2040	2030	1955	1895	1780	1460	1305	1150	926	786	695	507	434	240
18 OPzS 2250	NVZS022250WC0FA	2130	2120	2065	1995	1870	1550	1395	1230	1010	855	756	553	473	261
20 OPzS 2500	NVZS022500WC0FA	2495	2480	2435	2365	2210	1815	1625	1430	1150	978	864	632	540	298
22 OPzS 2750	NVZS022750WC0FA	2715	2700	2615	2530	2370	1950	1740	1535	1235	1045	927	678	579	320
24 OPzS 3000	NVZS023000WC0FA	2915	2895	2815	2730	2555	2125	1905	1685	1380	1170	1035	756	647	359

1.75 Vpc – Discharge in W at 20 °C

Type	Part number	3 min	10 min	15 min	20 min	30 min	1 h	1.5 h	2 h	3 h	4h	5 h	8 h	10 h	20 h
2 OPzS 100	NVZS020100WC0FB	209	196	179	162	139	98.3	79.3	67.3	52.8	43.1	36.7	25.3	21.1	11.6
3 OPzS 150	NVZS020150WC0FB	313	294	268	244	209	147	118	100	79.2	64.6	55.0	37.9	31.6	17.4
4 OPzS 200	NVZS020200WC0FB	419	393	358	325	279	196	158	134	105	86.1	73.3	50.6	42.0	23.3
5 OPzS 250	NVZS020250WC0FB	507	476	434	394	340	240	194	166	129	105	90.4	62.3	52.0	28.7
6 OPzS 300	NVZS020300WC0FB	591	554	506	459	398	283	230	197	152	124	107	73.9	61.9	34.3
5 OPzS 350	NVZS020350WC0FB	586	559	527	500	444	347	283	240	183	151	130	91.1	75.9	42.1
6 OPzS 420	NVZS020420WC0FB	674	644	606	576	517	403	332	284	219	180	155	109	90.9	50.4
7 OPzS 490	NVZS020490WC0FB	770	735	692	658	590	461	383	328	255	210	181	127	105	58.8
6 OPzS 600	NVZS020600WC0FB	842	818	777	742	684	560	478	410	314	257	221	160	135	75.4
7 OPzS 700	NVZS020700WC0FB	930	902	857	819	755	617	527	452	346	283	243	176	149	83.1
8 OPzS 800	NVZS020800WC0FB	1230	1200	1119	1055	960	786	653	565	425	348	301	216	180	100
9 OPzS 900	NVZS020900WC0FB	1330	1290	1205	1135	1035	846	704	609	458	374	324	233	193	108
10 OPzS 1000	NVZS021000WC0FB	1480	1435	1355	1285	1175	961	810	698	529	433	374	269	226	126
12 OPzS 1200	NVZS021200WC0FB	1695	1650	1565	1495	1380	1130	964	826	632	516	445	323	273	151
12 OPzS 1500	NVZS021500WC0FB	1690	1675	1630	1575	1470	1210	1075	951	761	642	565	403	341	189
14 OPzS 1750	NVZS021750WC0FB	1795	1780	1725	1665	1560	1280	1140	1005	805	679	599	427	360	200
16 OPzS 2000	NVZS022000WC0FA	2440	2420	2330	2245	2080	1670	1470	1280	1010	850	747	534	450	250
18 OPzS 2250	NVZS022250WC0FA	2555	2535	2455	2360	2185	1775	1570	1370	1095	924	815	581	490	274
20 OPzS 2500	NVZS022500WC0FA	3035	3010	2905	2786	2590	2085	1825	1590	1255	1055	931	665	561	312
22 OPzS 2750	NVZS022750WC0FA	3245	3220	3115	2990	2765	2230	1960	1705	1345	1130	997	712	599	334
24 OPzS 3000	NVZS023000WC0FA	3500	3465	3355	3220	2990	2435	2140	1870	1500	1260	1115	796	670	372

Classic OPzS

Constant power discharge · OPzS cells

1.70 Vpc – Discharge in W at 20 °C

Type	Part number	3 min	10 min	15 min	20 min	30 min	1 h	1.5 h	2 h	3 h	4h	5 h	8 h	10 h	20 h
2 OPzS 100	NVZS020100WC0FB	237	218	195	176	148	101	81.3	68.4	54.0	43.7	37.0	25.4	21.1	11.6
3 OPzS 150	NVZS020150WC0FB	357	327	292	264	223	152	121	102	81.0	65.6	55.6	38.2	31.7	17.5
4 OPzS 200	NVZS020200WC0FB	475	436	390	352	297	203	162	136	107	87.4	74.2	50.8	42.3	23.4
5 OPzS 250	NVZS020250WC0FB	576	530	473	427	363	249	200	169	132	106	91.3	62.6	52.3	28.9
6 OPzS 300	NVZS020300WC0FB	675	618	553	499	426	294	237	201	156	126	108	74.3	62.4	34.5
5 OPzS 350	NVZS020350WC0FB	673	634	588	551	483	365	295	247	188	153	132	91.9	77.2	43.2
6 OPzS 420	NVZS020420WC0FB	774	729	677	635	561	424	346	293	225	184	158	111	92.4	51.7
7 OPzS 490	NVZS020490WC0FB	884	833	773	725	641	485	399	338	262	215	184	129	107	60.2
6 OPzS 600	NVZS020600WC0FB	961	923	879	835	763	607	511	431	325	262	224	162	136	76.6
7 OPzS 700	NVZS020700WC0FB	1055	1020	969	921	842	670	564	475	359	290	247	179	150	84.4
8 OPzS 800	NVZS020800WC0FB	1405	1354	1265	1185	1070	851	696	597	444	358	304	219	183	102
9 OPzS 900	NVZS020900WC0FB	1515	1460	1360	1275	1150	916	749	643	478	384	328	235	197	110
10 OPzS 1000	NVZS021000WC0FB	1685	1620	1530	1440	1310	1045	865	735	551	447	378	273	229	128
12 OPzS 1200	NVZS021200WC0FB	1940	1860	1769	1685	1540	1224	1030	869	655	530	451	327	275	154
12 OPzS 1500	NVZS021500WC0FB	1950	1930	1865	1785	1660	1350	1175	1025	803	672	590	414	348	193
14 OPzS 1750	NVZS021750WC0FB	2070	2040	1980	1890	1755	1430	1245	1085	850	712	626	438	368	205
16 OPzS 2000	NVZS022000WC0FA	2820	2790	2675	2550	2345	1860	1605	1375	1065	889	792	548	460	255
18 OPzS 2250	NVZS022250WC0FA	2955	2915	2810	2680	2460	1975	1715	1475	1155	968	850	597	500	279
20 OPzS 2500	NVZS022500WC0FA	3510	3465	3320	3175	2915	2315	2000	1715	1325	1105	973	682	573	319
22 OPzS 2750	NVZS022750WC0FA	3760	3715	3560	3400	3115	2485	2140	1830	1415	1185	1040	731	613	341
24 OPzS 3000	NVZS023000WC0FA	4045	3995	3835	3670	3370	2705	2345	2015	1585	1320	1160	816	684	381

1.65 Vpc – Discharge in W at 20 °C

Type	Part number	3 min	10 min	15 min	20 min	30 min	1 h	1.5 h	2 h	3 h	4h	5 h	8 h	10 h	20 h
2 OPzS 100	NVZS020100WC0FB	262	235	207	185	154	103	82.1	68.8	54.5	43.9	37.2	25.4	21.1	11.6
3 OPzS 150	NVZS020150WC0FB	394	353	311	278	231	155	123	103	81.7	65.8	55.9	38.2	31.7	17.5
4 OPzS 200	NVZS020200WC0FB	525	471	414	371	308	206	164	138	109	87.8	74.7	50.8	42.3	23.4
5 OPzS 250	NVZS020250WC0FB	639	573	504	451	377	253	202	171	133	107	91.9	62.6	52.3	28.9
6 OPzS 300	NVZS020300WC0FB	747	670	589	527	443	299	239	203	157	126	108	74.3	62.4	34.5
5 OPzS 350	NVZS020350WC0FB	755	701	643	595	514	376	303	252	191	156	132	91.9	77.2	43.2
6 OPzS 420	NVZS020420WC0FB	869	807	740	685	597	437	355	299	229	186	158	111	92.4	51.7
7 OPzS 490	NVZS020490WC0FB	992	921	845	782	682	499	410	345	267	216	185	130	108	60.2
6 OPzS 600	NVZS020600WC0FB	1065	1015	976	922	833	648	534	448	331	265	225	165	137	77.1
7 OPzS 700	NVZS020700WC0FB	1175	1120	1075	1015	919	715	589	494	366	292	248	183	151	85.1
8 OPzS 800	NVZS020800WC0FB	1565	1495	1395	1295	1165	895	726	617	456	365	306	221	184	103
9 OPzS 900	NVZS020900WC0FB	1685	1610	1505	1395	1255	964	782	664	491	393	331	238	198	111
10 OPzS 1000	NVZS021000WC0FB	1875	1790	1695	1585	1430	1105	902	762	563	453	381	277	230	129
12 OPzS 1200	NVZS021200WC0FB	2150	2049	1965	1859	1680	1305	1075	903	668	536	455	333	277	155
12 OPzS 1500	NVZS021500WC0FB	2200	2170	2085	1995	1835	1475	1260	1080	832	695	610	419	350	195
14 OPzS 1750	NVZS021750WC0FB	2330	2295	2210	2115	1945	1565	1330	1145	883	737	645	444	369	206
16 OPzS 2000	NVZS022000WC0FA	3175	3130	2980	2845	2590	2040	1715	1455	1105	921	805	555	462	257
18 OPzS 2250	NVZS022250WC0FA	3330	3280	3140	3000	2725	2160	1830	1555	1200	1000	877	603	503	280
20 OPzS 2500	NVZS022500WC0FA	3955	3900	3720	3555	3235	2535	2130	1810	1375	1145	1005	690	574	320
22 OPzS 2750	NVZS022750WC0FA	4225	4165	3980	3800	3455	2715	2285	1940	1470	1225	1075	739	616	343
24 OPzS 3000	NVZS023000WC0FA	4555	4490	4290	4105	3730	2960	2505	2125	1640	1370	1200	825	688	384

Classic OPzS

Constant power discharge · OPzS cells

1.60 Vpc – Discharge in W at 20 °C

Type	Part number	3 min	10 min	15 min	20 min	30 min	1 h	1.5 h	2 h	3 h	4h	5 h	8 h	10 h	20 h
2 OPzS 100	NVZS020100WC0FB	282	248	217	193	159	104	82.0	69.7	54.7	44.0	37.4	25.4	21.1	11.6
3 OPzS 150	NVZS020150WC0FB	422	373	326	289	238	156	123	104	82.2	66.0	56.0	38.2	31.7	17.5
4 OPzS 200	NVZS020200WC0FB	564	497	434	386	317	209	164	138	109	88.0	74.7	50.8	42.3	23.4
5 OPzS 250	NVZS020250WC0FB	689	605	529	470	387	256	202	171	134	107	92.0	62.6	52.3	28.9
6 OPzS 300	NVZS020300WC0FB	806	710	620	550	455	303	239	204	158	127	108	74.3	62.4	34.5
5 OPzS 350	NVZS020350WC0FB	834	763	692	632	542	383	307	254	194	157	133	91.9	77.2	43.2
6 OPzS 420	NVZS020420WC0FB	959	879	797	727	630	445	360	301	233	187	159	111	92.4	51.7
7 OPzS 490	NVZS020490WC0FB	1095	1005	910	830	720	508	416	347	271	218	185	130	108	60.2
6 OPzS 600	NVZS020600WC0FB	1165	1105	1069	1010	899	683	549	461	333	266	226	166	137	77.1
7 OPzS 700	NVZS020700WC0FB	1290	1220	1180	1115	992	754	605	509	367	293	249	183	152	85.1
8 OPzS 800	NVZS020800WC0FB	1720	1625	1520	1400	1255	924	749	626	461	366	307	222	185	103
9 OPzS 900	NVZS020900WC0FB	1855	1750	1640	1510	1350	995	807	674	496	396	331	239	198	111
10 OPzS 1000	NVZS021000WC0FB	2050	1945	1850	1725	1540	1150	929	779	568	454	382	278	231	129
12 OPzS 1200	NVZS021200WC0FB	2350	2225	2150	2035	1815	1380	1105	930	671	538	455	334	278	155
12 OPzS 1500	NVZS021500WC0FB	2435	2390	2290	2200	2005	1590	1325	1120	854	710	619	420	350	195
14 OPzS 1750	NVZS021750WC0FB	2580	2535	2420	2320	2125	1685	1400	1185	905	751	654	446	369	206
16 OPzS 2000	NVZS022000WC0FA	3515	3455	3270	3130	2830	2200	1805	1510	1130	940	817	557	462	257
18 OPzS 2250	NVZS022250WC0FA	3685	3615	3445	3290	2975	2335	1925	1615	1230	1025	890	606	503	280
20 OPzS 2500	NVZS022500WC0FA	4385	4300	4075	3895	3520	2730	2250	1885	1405	1170	1020	694	574	320
22 OPzS 2750	NVZS022750WC0FA	4700	4605	4360	4180	3775	2925	2405	2015	1510	1250	1090	742	616	343
24 OPzS 3000	NVZS023000WC0FA	5045	4950	4705	4505	4070	3195	2630	2205	1685	1400	1220	829	688	384

Battery Service – Energy Solutions

Keeping your business on the move

GNB® is the Expert

Who could do this job better than the professionals of a company with more than 100 years of experience in battery development, production and application?

Leave the responsibility for the maintenance of your batteries and chargers to the professionals: a GNB service contract provides you with exceptional economic advantages through time savings, cost savings and safety!

Installation of Batteries and Systems for Network Power

> Development of complete turnkey solutions from the design concept to installation and commissioning.

> Installation according to legal and safety regulations including CE certification by approved installation technicians.

> Training and certification of external installation technicians according to CE regulations.

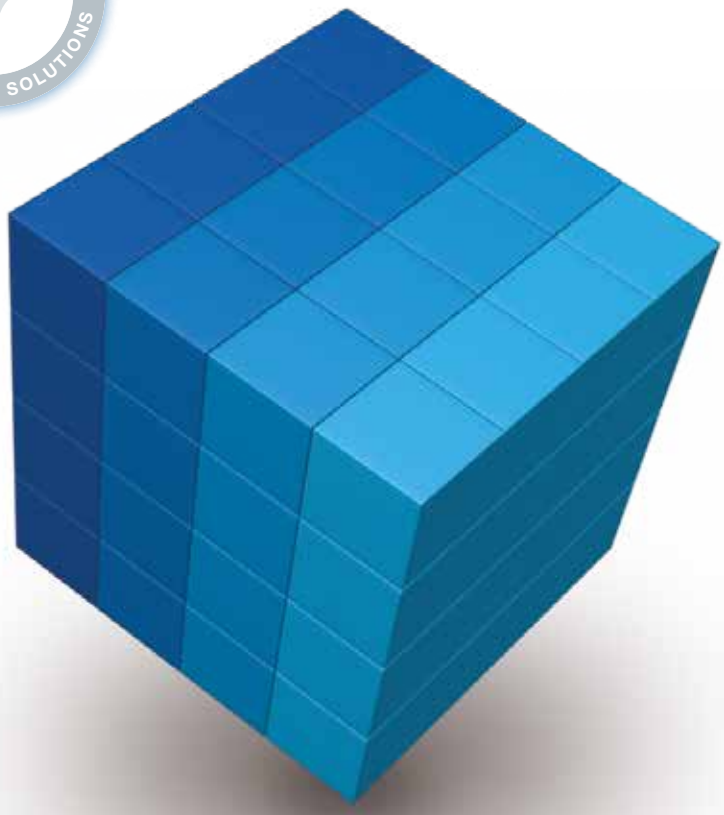

- **Inspection Contract**
- **Maintenance Contract**
- **Lifetime Warranty Contract**
- **Full Service Contract**

Classic OPzS

Notes

GNB® INDUSTRIAL POWER
A Division of Exide Technologies

Exide Technologies, with operations in more than 80 countries, is one of the world's largest producers and recyclers of lead-acid batteries. Exide Technologies provides a comprehensive and customized range of stored electrical energy solutions. Based on over 120 years of experience in the development of innovative technologies, Exide Technologies is an esteemed partner of OEMs and serves the spare parts market for industrial and automotive applications.

GNB Industrial Power – A division of Exide Technologies – offers an extensive range of storage products and services, including solutions for telecommunication systems, railway applications, mining, photovoltaic (solar energy), uninterrupted power supply (UPS), electrical power generation and distribution, fork lifts and electric vehicles.

Exide Technologies takes pride in its commitment to a better environment. An integrated approach to manufacturing, distributing and recycling of lead-acid batteries has been developed to ensure a safe and responsible life cycle for all of its products.

NXCZSTEPDF00220 Subjects to alterations

www.gnb.com

GNB® INDUSTRIAL POWER devises enduring energy concepts that convince with efficiency, flexibility and profitability.