GNB® INDUSTRIAL POWER
A Division of Exide Technologies

Industrial Batteries

Classic GroE

»The proven,
reliable energy storage«

Classic®

Classic GroE

The proven, reliable energy storage

Applications:

Classic GroE batterieswill be used mainly in power supply utilities (power stations) because of their extreme reliability and high performance.

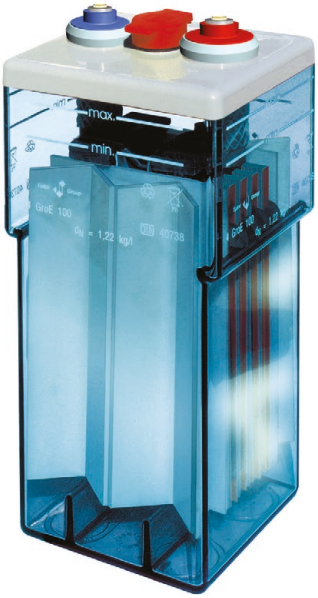

Specifications:

>Classic GroE batteries bridge short and long discharge times, reliably and safely, with a high stable voltage

>Extremely low internal resistance and high current output

>Low maintenance;
no antimonyin the positive plate

>Positive pure-lead, large-format plates with a laminated structure, pasted negative grid plates

>Transparent cell containers in SAN plastic make inspection and maintenance easy

>Minimal water consumption on float charge

>Low self-discharge

>Nominal capacity 75 - 2600 Ah C_{10}

>Designed in accordance with DIN 40738

>Terminal design with HAGEN Patentpol

>The high production quality and the low acid density ensure an extremely long design life of 25 years

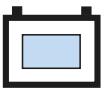
Planté plate

Nominal capacity 75 – 2600 Ah

Single cell

25 years design life

Low maintenance

Recyclable

Special high current performance

Container, terminal and torque

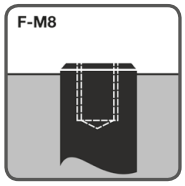

20 Nm

> **Container:** SAN (Styrene acrylonitrile) cells

Classic GroE

Technical characteristics and data

Cells with GroE 25-Plate

Type	Part number	Nominal voltage V	Capacity C_{10} 1.8 V/C 20 °C Ah	Nominal capacity C_{10} acc. to DIN 40738 Ah	Length (l) max. mm	Width (b/w) max. mm	Height up to top of cover (h_t) max. mm	Height* incl. connectors max. mm	Installed length (B/L) mm	Weight cell incl. acid approx. kg	Weight acid** approx. kg	Internal resistance mOhm	Short circuit current A	Terminal	Pole pairs
3 GroE 75	NVGR020075WC0FA	2	75	75	182	153	364	411	192	17.5	6.6	1.268	1624	F-M8	1
4 GroE 100	NVGR020100WC0FA	2	100	100	182	153	364	411	192	19.7	6.4	0.951	2165	F-M8	1
5 GroE 125	NVGR020125WC0FA	2	125	125	182	153	364	411	192	21.9	6.2	0.761	2706	F-M8	1
6 GroE 150	NVGR020150WC0FA	2	150	150	182	153	364	411	192	24.1	6.0	0.634	3247	F-M8	1
7 GroE 175	NVGR020175WC0FA	2	175	175	182	153	364	411	192	26.3	5.8	0.543	3788	F-M8	1
8 GroE 200	NVGR020200WC0FA	2	200	200	182	228	364	411	192	33.2	9.4	0.475	4329	F-M8	1
9 GroE 225	NVGR020225WC0FA	2	225	225	182	228	364	411	192	35.4	9.2	0.422	4871	F-M8	1
10 GroE 250	NVGR020250WC0FA	2	250	250	182	228	364	411	192	37.6	9.0	0.380	5412	F-M8	1
11 GroE 275	NVGR020275WC0FA	2	275	275	182	228	364	411	192	39.8	8.8	0.346	5953	F-M8	1
12 GroE 300	NVGR020300WC0FA	2	300	300	182	228	364	411	192	42.0	8.6	0.317	6494	F-M8	1
13 GroE 325	NVGR020325WC0FA	2	325	325	182	338	364	411	192	52.5	14.1	0.292	7035	F-M8	2
14 GroE 350	NVGR020350WC0FA	2	350	350	182	338	364	411	192	54.7	13.8	0.271	7577	F-M8	2
15 GroE 375	NVGR020375WC0FA	2	375	375	182	338	364	411	192	56.9	13.6	0.253	8118	F-M8	2
16 GroE 400	NVGR020400WC0FA	2	400	400	182	338	364	411	192	59.1	13.3	0.237	8659	F-M8	2
17 GroE 425	NVGR020425WC0FA	2	425	425	182	338	364	411	192	61.3	13.0	0.223	9200	F-M8	2
18 GroE 450	NVGR020450WC0FA	2	450	450	182	338	364	411	192	63.5	12.7	0.211	9741	F-M8	2

Cells with GroE 100-Plate

Type	Part number	Nominal voltage V	Capacity C_{10} 1.8 V/C 20 °C Ah	Nominal capacity C_{10} acc. to DIN 40738 Ah	Length (l) max. mm	Width (b/w) max. mm	Height up to top of cover (h_t) max. mm	Height* incl. connectors max. mm	Installed length (B/L) mm	Weight cell incl. acid approx. kg	Weight acid** approx. kg	Internal resistance mOhm	Short circuit current A	Terminal	Pole pairs
5 GroE 500	NVGR020500WC0FA	2	535	500	328	268	542	590	338	95	34	0.339	6062	F-M8	1
6 GroE 600	NVGR020600WC0FA	2	642	600	328	268	542	590	338	104	33	0.283	7275	F-M8	1
7 GroE 700	NVGR020700WC0FA	2	749	7007	328	268	542	590	338	113	32	0.242	8487	F-M8	2
8 GroE 800	NVGR020800WC0FA	2	856	800	328	268	542	590	338	122	31	0.212	9700	F-M8	2
9 GroE 900	NVGR020900WC0FA	2	963	900	328	268	542	590	338	131	30	0.188	10913	F-M8	2
10 GroE 1000	NVGR021000WC0FA	2	1070	1000	328	268	542	590	338	140	29	0.169	12125	F-M8	2
11 GroE 1100	NVGR021100WC0FA	2	1177	1100	328	268	542	590	338	149	28	0.154	13338	F-M8	2
12 GroE 1200	NVGR021200WC0FA	2	1284	1200	328	348	542	590	338	170	39	0.141	14551	F-M8	3
13 GroE 1300	NVGR021300WC0FA	2	1391	1300	328	348	542	590	338	179	38	0.130	15763	F-M8	3
14 GroE 1400	NVGR021400WC0FA	2	1498	1400	328	348	542	590	338	188	37	0.121	16976	F-M8	3
15 GroE 1500	NVGR021500WC0FA	2	1605	1500	328	348	542	590	338	197	36	0.113	18188	F-M8	3
16 GroE 1600	NVGR021600WC0FA	2	1712	1600	328	438	542	590	338	222	49	0.106	19401	F-M8	3
17 GroE 1700	NVGR021700WC0FA	2	1819	1700	328	438	542	590	338	231	48	0.099	20613	F-M8	3
18 GroE 1800	NVGR021800WC0FA	2	1926	1800	328	438	542	590	338	240	47	0.094	21826	F-M8	3
19 GroE 1900	NVGR021900WC0FA	2	2033	1900	328	438	542	590	338	249	46	0.089	23038	F-M8	3
20 GroE 2000	NVGR022000WC0FA	2	2140	2000	328	438	542	590	338	258	45	0.084	24251	F-M8	3
21 GroE 2100	NVGR022100WC0FA	2	2247	2100	328	528	542	590	338	285	58	0.080	25464	F-M8	4
22 GroE 2200	NVGR022200WC0FA	2	2354	2200	328	528	542	590	338	294	57	0.077	26675	F-M8	4
23 GroE 2300	NVGR022300WC0FA	2	2461	2300	328	528	542	590	338	303	56	0.073	27889	F-M8	4
24 GroE 2400	NVGR022400WC0FA	2	2568	2400	328	528	542	590	338	312	55	0.070	29099	F-M8	4
25 GroE 2500	NVGR022500WC0FA	2	2675	2500	328	573	542	590	338	325	60	0.067	30314	F-M8	4
26 GroE 2600	NVGR022600WC0FA	2	2782	2600	328	573	542	590	338	334	59	0.065	31526	F-M8	4

* The above mentioned height can differ depending on the used vent(s)
** Acid density d_N =1.22 kg/ l

Classic GroE

Drawings

3 GroE 75 up to 12 GroE 300

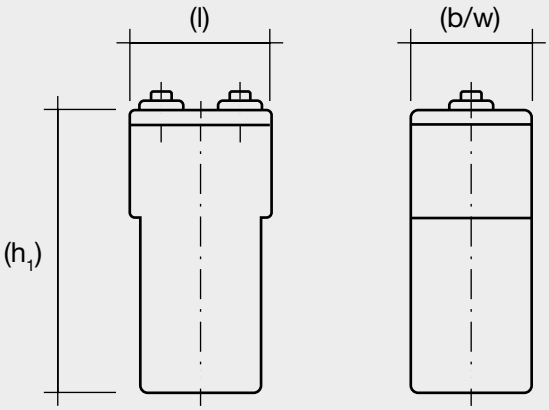

13 GroE325 up to 18 GroE 450

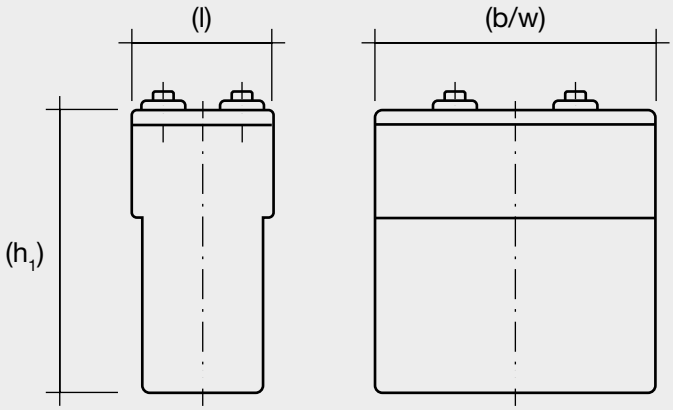

5 GroE 500 and 6 GroE 600

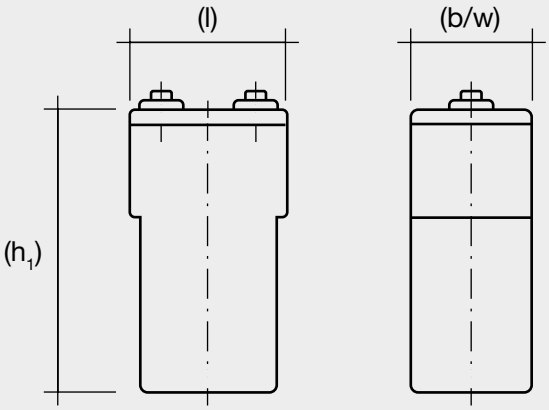

7 GroE 700 up to 11 GroE 1100

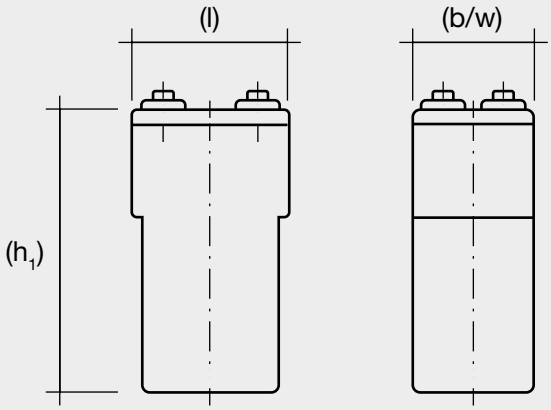

12 GroE 1200 up to 20 GroE 2000

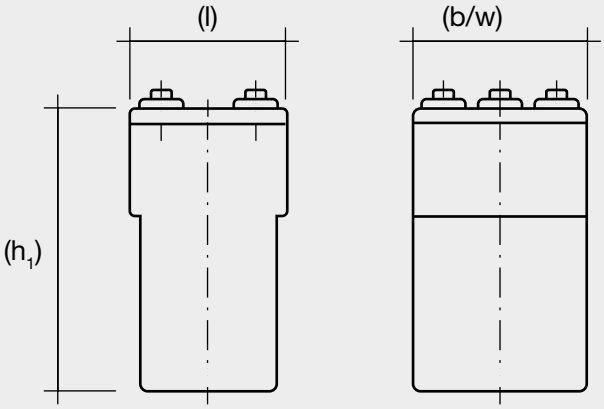

21 GroE 2100 up to 26 GroE 2600

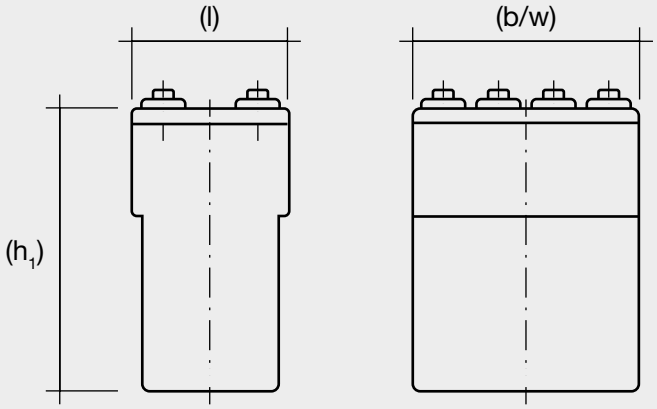

Not to scale!

Classic GroE

Constant current discharge

1.70 Vpc – Discharge in A at 20 °C

Type	Part number	1 min	5 min	10 min	15 min	20 min	30 min	1 h	3 h	5 h	10 h
3 GroE 75	NVGR020075WC0FA	196.5	196.5	142.5	120.0	103.5	82.2	51.3	22.8	15.6	7.5
4 GroE 100	NVGR020100WC0FA	262.0	262.0	190.0	160.0	138.0	109.6	68.4	30.4	20.8	10.0
5 GroE 125	NVGR020125WC0FA	327.5	327.5	237.5	200.0	172.5	137.0	85.5	38.0	26.0	12.5
6 GroE 150	NVGR020150WC0FA	393.0	393.0	285.0	240.0	207.0	164.4	102.6	45.6	31.2	15.0
7 GroE 175	NVGR020175WC0FA	458.5	458.5	332.5	280.0	241.5	191.8	119.7	53.2	36.4	17.5
8 GroE 200	NVGR020200WC0FA	524.0	524.0	380.0	320.0	276.0	219.2	136.8	60.8	41.6	20.0
9 GroE 225	NVGR020225WC0FA	589.5	589.5	427.5	360.0	310.5	246.6	153.9	68.4	46.8	22.5
10 GroE 250	NVGR020250WC0FA	655.0	655.0	475.0	400.0	345.0	274.0	171.0	76.0	52.0	25.0
11 GroE 275	NVGR020275WC0FA	720.5	720.5	522.5	440.0	379.5	301.4	188.1	83.6	57.2	27.5
12 GroE 300	NVGR020300WC0FA	786.0	786.0	570.0	480.0	414.0	328.8	205.2	91.2	62.4	30.0
13 GroE 325	NVGR020325WC0FA	851.5	851.5	617.5	520.0	448.5	356.2	222.3	98.8	67.6	32.5
14 GroE 350	NVGR020350WC0FA	917.0	917.0	665.0	560.0	483.0	383.6	239.4	106.4	72.8	35.0
15 GroE 375	NVGR020375WC0FA	982.5	982.5	712.5	600.0	517.5	411.0	256.5	114.0	78.0	37.5
16 GroE 400	NVGR020400WC0FA	1048.0	1048.0	760.0	640.0	552.0	438.4	273.6	121.6	83.2	40.0
17 GroE 425	NVGR020425WC0FA	1113.5	1113.5	807.5	680.0	586.5	465.8	290.7	129.2	88.4	42.5
18 GroE 450	NVGR020450WC0FA	1179.0	1179.0	855.0	720.0	621.0	493.2	307.8	136.8	93.6	45.0
5 GroE 500	NVGR020500WC0FA	840.0	840.0	725.0	630.0	570.0	480.0	327.5	146.0	97.5	57.0
6 GroE 600	NVGR020600WC0FA	1008.0	1008.0	870.0	756.0	684.0	576.0	393.0	175.2	117.0	68.4
7 GroE 700	NVGR020700WC0FA	1176.0	1176.0	1015.0	882.0	798.0	672.0	458.5	204.4	136.5	79.8
8 GroE 800	NVGR020800WC0FA	1344.0	1344.0	1160.0	1008.0	912.0	768.0	524.0	233.6	156.0	91.2
9 GroE 900	NVGR020900WC0FA	1512.0	1512.0	1305.0	1134.0	1026.0	864.0	589.5	262.8	175.5	102.6
10 GroE 1000	NVGR021000WC0FA	1680.0	1680.0	1450.0	1260.0	1140.0	960.0	655.0	292.0	195.0	114.0
11 GroE 1100	NVGR021100WC0FA	1848.0	1848.0	1595.0	1386.0	1254.0	1056.0	720.5	321.2	214.5	125.4
12 GroE 1200	NVGR021200WC0FA	2016.0	2016.0	1740.0	1512.0	1368.0	1152.0	786.0	350.4	234.0	136.8
13 GroE 1300	NVGR021300WC0FA	2184.0	2184.0	1885.0	1638.0	1482.0	1248.0	851.5	379.6	253.5	148.2
14 GroE 1400	NVGR021400WC0FA	2352.0	2352.0	2030.0	1764.0	1596.0	1344.0	917.0	408.8	273.0	159.6
15 GroE 1500	NVGR021500WC0FA	2520.0	2520.0	2175.0	1890.0	1710.0	1440.0	982.5	438.0	292.5	171.0
16 GroE 1600	NVGR021600WC0FA	2688.0	2688.0	2320.0	2016.0	1824.0	1536.0	1048.0	467.2	312.0	182.4
17 GroE 1700	NVGR021700WC0FA	2856.0	2856.0	2465.0	2142.0	1938.0	1632.0	1113.5	496.4	331.5	193.8
18 GroE 1800	NVGR021800WC0FA	3024.0	3024.0	2610.0	2268.0	2052.0	1728.0	1179.0	525.6	351.0	205.2
19 GroE 1900	NVGR021900WC0FA	3192.0	3192.0	2755.0	2394.0	2166.0	1824.0	1244.5	554.8	370.5	216.6
20 GroE 2000	NVGR022000WC0FA	3360.0	3360.0	2900.0	2520.0	2280.0	1920.0	1310.0	584.0	390.0	228.0
21 GroE 2100	NVGR022100WC0FA	3528.0	3528.0	3045.0	2646.0	2394.0	2016.0	1375.5	613.2	409.5	239.4
22 GroE 2200	NVGR022200WC0FA	3696.0	3696.0	3190.0	2772.0	2508.0	2112.0	1441.0	642.4	429.0	250.8
23 GroE 2300	NVGR022300WC0FA	3864.0	3864.0	3335.0	2898.0	2622.0	2208.0	1506.5	671.6	448.5	262.2
24 GroE 2400	NVGR022400WC0FA	4032.0	4032.0	3480.0	3024.0	2736.0	2304.0	1572.0	700.8	468.0	237.6
25 GroE 2500	NVGR022500WC0FA	4200.0	4200.0	3625.0	3150.0	2850.0	2400.0	1637.5	730.0	487.5	285.0
26 GroE 2600	NVGR022600WC0FA	4368.0	4368.0	3770.0	3276.0	2964.0	2496.0	1703.0	759.2	507.0	296.4

Classic GroE

Constant current discharge

1.75 Vpc – Discharge in A at 20 °C

Type	Part number	1 min	5 min	10 min	15 min	20 min	30 min	1 h	3 h	5 h	10 h
3 GroE 75	NVGR020075WC0FA	172.5	172.5	126.0	108.0	94.5	78.0	50.7	22.8	15.6	7.5
4 GroE 100	NVGR020100WC0FA	230.0	230.0	168.0	144.0	126.0	104.0	67.6	30.4	20.8	10.0
5 GroE 125	NVGR020125WC0FA	287.5	287.5	210.0	180.0	157.5	130.0	84.5	38.0	26.0	12.5
6 GroE 150	NVGR020150WC0FA	345.0	345.0	252.0	216.0	189.0	156.0	101.4	45.6	31.2	15.0
7 GroE 175	NVGR020175WC0FA	402.5	402.5	294.0	252.0	220.5	182.0	118.3	53.2	36.4	17.5
8 GroE 200	NVGR020200WC0FA	460.0	460.0	336.0	288.0	252.0	208.0	135.2	60.8	41.6	20.0
9 GroE 225	NVGR020225WC0FA	517.5	517.5	378.0	324.0	283.5	234.0	152.1	68.4	46.8	22.5
10 GroE 250	NVGR020250WC0FA	575.0	575.0	420.0	360.0	315.0	260.0	169.0	76.0	52.0	25.0
11 GroE 275	NVGR020275WC0FA	632.5	632.5	462.0	396.0	346.5	286.0	185.9	83.6	57.2	27.5
12 GroE 300	NVGR020300WC0FA	690.0	690.0	504.0	432.0	378.0	312.0	202.8	91.2	62.4	30.0
13 GroE 325	NVGR020325WC0FA	747.5	747.5	546.0	468.0	409.5	338.0	219.7	98.8	67.6	32.5
14 GroE 350	NVGR020350WC0FA	805.0	805.0	588.0	504.0	441.0	364.0	236.6	106.4	72.8	35.0
15 GroE 375	NVGR020375WC0FA	862.5	862.5	630.0	540.0	472.5	390.0	253.5	114.0	78.0	37.5
16 GroE 400	NVGR020400WC0FA	920.0	920.0	672.0	576.0	504.0	416.0	270.4	121.6	83.2	40.0
17 GroE 425	NVGR020425WC0FA	977.5	977.5	714.0	612.0	535.5	442.0	287.3	129.2	88.4	42.5
18 GroE 450	NVGR020450WC0FA	1035.0	1035.0	756.0	648.0	567.0	468.0	304.2	136.8	93.6	45.0
5 GroE 500	NVGR020500WC0FA	750.0	750.0	660.0	575.0	520.0	443.0	307.5	146.0	97.5	57.0
6 GroE 600	NVGR020600WC0FA	900.0	900.0	792.0	690.0	624.0	531.6	369.0	175.2	117.0	68.4
7 GroE 700	NVGR020700WC0FA	1050.0	1050.0	924.0	805.0	728.0	620.2	430.5	204.4	136.5	79.8
8 GroE 800	NVGR020800WC0FA	1200.0	1200.0	1056.0	920.0	832.0	708.8	492.0	233.6	156.0	91.2
9 GroE 900	NVGR020900WC0FA	1350.0	1350.0	1188.0	1035.0	936.0	797.4	553.5	262.8	175.5	102.6
10 GroE 1000	NVGR021000WC0FA	1500.0	1500.0	1320.0	1150.0	1040.0	886.0	615.0	292.0	195.0	114.0
11 GroE 1100	NVGR021100WC0FA	1650.0	1650.0	1452.0	1265.0	1144.0	974.6	676.5	321.2	214.5	125.4
12 GroE 1200	NVGR021200WC0FA	1800.0	1800.0	1584.0	1380.0	1248.0	1063.2	738.0	350.4	234.0	136.8
13 GroE 1300	NVGR021300WC0FA	1950.0	1950.0	1716.0	1495.0	1352.0	1151.8	799.5	379.6	253.5	148.2
14 GroE 1400	NVGR021400WC0FA	2100.0	2100.0	1848.0	1610.0	1456.0	1240.4	861.0	408.8	273.0	159.6
15 GroE 1500	NVGR021500WC0FA	2250.0	2250.0	1980.0	1725.0	1560.0	1329.0	922.5	438.0	292.5	171.0
16 GroE 1600	NVGR021600WC0FA	2400.0	2400.0	2112.0	1840.0	1664.0	1417.6	984.0	467.2	312.0	182.4
17 GroE 1700	NVGR021700WC0FA	2550.0	2550.0	2244.0	1955.0	1768.0	1506.2	1045.5	496.4	331.5	193.8
18 GroE 1800	NVGR021800WC0FA	2700.0	2700.0	2376.0	2070.0	1872.0	1594.8	1107.0	525.6	351.0	205.2
19 GroE 1900	NVGR021900WC0FA	2850.0	2850.0	2508.0	2185.0	1976.0	1683.4	1168.5	554.8	370.5	216.6
20 GroE 2000	NVGR022000WC0FA	3000.0	3000.0	2640.0	2300.0	2080.0	1772.0	1230.0	584.0	390.0	228.0
21 GroE 2100	NVGR022100WC0FA	3150.0	3150.0	2772.0	2415.0	2184.0	1860.6	1291.5	613.2	409.5	239.4
22 GroE 2200	NVGR022200WC0FA	3300.0	3300.0	2904.0	2530.0	2288.0	1949.2	1353.0	642.4	429.0	250.8
23 GroE 2300	NVGR022300WC0FA	3450.0	3450.0	3036.0	2645.0	2392.0	2037.8	1414.5	671.6	448.5	262.2
24 GroE 2400	NVGR022400WC0FA	3600.0	3600.0	3168.0	2760.0	2496.0	2126.4	1476.0	700.8	468.0	273.6
25 GroE 2500	NVGR022500WC0FA	3750.0	3750.0	3300.0	2875.0	2600.0	2215.0	1537.5	730.0	487.5	285.0
26 GroE 2600	NVGR022600WC0FA	3900.0	3900.0	3432.0	2990.0	2704.0	2303.6	1599.0	759.2	507.0	296.4

Classic GroE

Constant current discharge

1.775 Vpc – Discharge in A at 20 °C

Type	Part number	1 min	5 min	10 min	15 min	20 min	30 min	1 h	3 h	5 h	10 h
3 GroE 75	NVGR020075WC0FA	148.2	148.2	118.8	102.0	90.0	74.4	49.5	22.8	15.6	7.5
4 GroE 100	NVGR020100WC0FA	197.6	197.6	158.4	136.0	120.0	99.2	66.0	30.4	20.8	10.0
5 GroE 125	NVGR020125WC0FA	247.0	247.0	198.0	170.0	150.0	124.0	82.5	38.0	26.0	12.5
6 GroE 150	NVGR020150WC0FA	296.4	296.4	237.6	204.0	180.0	148.8	99.0	45.6	31.2	15.0
7 GroE 175	NVGR020175WC0FA	345.8	345.8	277.2	238.0	210.0	173.6	115.5	53.2	36.4	17.5
8 GroE 200	NVGR020200WC0FA	395.2	395.2	316.8	272.0	240.0	198.4	132.0	60.8	41.6	20.0
9 GroE 225	NVGR020225WC0FA	444.6	444.6	356.4	306.0	270.0	223.2	148.5	68.4	46.8	22.5
10 GroE 250	NVGR020250WC0FA	494.0	494.0	396.0	340.0	300.0	248.0	165.0	76.0	52.0	25.0
11 GroE 275	NVGR020275WC0FA	543.4	543.4	435.6	374.0	330.0	272.8	181.5	83.6	57.2	27.5
12 GroE 300	NVGR020300WC0FA	592.8	592.8	475.2	408.0	360.0	297.6	198.0	91.2	62.4	30.0
13 GroE 325	NVGR020325WC0FA	642.2	642.2	514.8	442.0	390.0	322.4	214.5	98.8	67.6	32.5
14 GroE 350	NVGR020350WC0FA	691.6	691.6	554.4	476.0	420.0	347.2	231.0	106.4	72.8	35.0
15 GroE 375	NVGR020375WC0FA	741.0	741.0	594.0	510.0	450.0	372.0	247.5	114.0	78.0	37.5
16 GroE 400	NVGR020400WC0FA	790.4	790.4	633.6	544.0	480.0	396.8	264.0	121.6	83.2	40.0
17 GroE 425	NVGR020425WC0FA	839.8	839.8	673.2	578.0	510.0	421.6	280.5	129.2	88.4	42.5
18 GroE 450	NVGR020450WC0FA	889.2	889.2	712.8	612.0	540.0	446.4	297.0	136.8	93.6	45.0
5 GroE 500	NVGR020500WC0FA	690.0	690.0	610.0	550.0	495.0	425.0	302.5	146.0	97.5	57.0
6 GroE 600	NVGR020600WC0FA	828.0	828.0	732.0	660.0	594.0	510.0	363.0	175.2	117.0	68.4
7 GroE 700	NVGR020700WC0FA	966.0	966.0	854.0	770.0	693.0	595.0	423.5	204.4	136.5	79.8
8 GroE 800	NVGR020800WC0FA	1104.0	1104.0	976.0	880.0	792.0	680.0	484.0	233.6	156.0	91.2
9 GroE 900	NVGR020900WC0FA	1242.0	1242.0	1098.0	990.0	891.0	765.0	544.5	262.8	175.5	102.6
10 GroE 1000	NVGR021000WC0FA	1380.0	1380.0	1220.0	1100.0	990.0	850.0	605.0	292.0	195.0	114.0
11 GroE 1100	NVGR021100WC0FA	1518.0	1518.0	1342.0	1210.0	1089.0	935.0	665.5	321.2	214.5	125.4
12 GroE 1200	NVGR021200WC0FA	1656.0	1656.0	1464.0	1320.0	1188.0	1020.0	726.0	350.4	234.0	136.8
13 GroE 1300	NVGR021300WC0FA	1794.0	1794.0	1586.0	1430.0	1287.0	1105.0	786.5	379.6	253.5	148.2
14 GroE 1400	NVGR021400WC0FA	1932.0	1932.0	1708.0	1540.0	1386.0	1190.0	847.0	408.8	273.0	159.6
15 GroE 1500	NVGR021500WC0FA	2070.0	2070.0	1830.0	1650.0	1485.0	1275.0	907.5	438.0	292.5	171.0
16 GroE 1600	NVGR021600WC0FA	2208.0	2208.0	1952.0	1760.0	1584.0	1360.0	968.0	467.2	312.0	182.4
17 GroE 1700	NVGR021700WC0FA	2346.0	2346.0	2074.0	1870.0	1683.0	1445.0	1028.5	496.4	331.5	193.8
18 GroE 1800	NVGR021800WC0FA	2484.0	2484.0	2196.0	1980.0	1782.0	1530.0	1089.0	525.6	351.0	205.2
19 GroE 1900	NVGR021900WC0FA	2622.0	2622.0	2318.0	2090.0	1881.0	1615.0	1149.5	554.8	370.5	216.6
20 GroE 2000	NVGR022000WC0FA	2760.0	2760.0	2440.0	2200.0	1980.0	1700.0	1210.0	584.0	390.0	228.0
21 GroE 2100	NVGR022100WC0FA	2898.0	2898.0	2562.0	2310.0	2079.0	1785.0	1270.5	613.2	409.5	239.4
22 GroE 2200	NVGR022200WC0FA	3036.0	3036.0	2684.0	2420.0	2178.0	1870.0	1331.0	642.4	429.0	250.8
23 GroE 2300	NVGR022300WC0FA	3174.0	3174.0	2806.0	2530.0	2277.0	1955.0	1391.5	671.6	448.5	262.2
24 GroE 2400	NVGR022400WC0FA	3312.0	3312.0	2928.0	2640.0	2376.0	2040.0	1452.0	700.8	468.0	273.6
25 GroE 2500	NVGR022500WC0FA	3450.0	3450.0	3050.0	2750.0	2475.0	2125.0	1512.5	730.0	487.5	285.0
26 GroE 2600	NVGR022600WC0FA	3588.0	3588.0	3172.0	2860.0	2574.0	2210.0	1573.0	759.2	507.0	296.4

Classic GroE

Constant current discharge

1.80 Vpc – Discharge in A at 20 °C

Type	Part number	1 min	5 min	10 min	15 min	20 min	30 min	1 h	3 h	5 h	10 h
3 GroE 75	NVGR020075WC0FA	135.6	135.6	108.0	94.8	84.0	70.2	48.0	22.5	15.3	7.5
4 GroE 100	NVGR020100WC0FA	180.8	180.8	144.0	126.4	112.0	93.6	64.0	30.0	20.4	10.0
5 GroE 125	NVGR020125WC0FA	226.0	226.0	180.0	158.0	140.0	117.0	80.0	37.5	25.5	12.5
6 GroE 150	NVGR020150WC0FA	271.2	271.2	216.0	189.6	168.0	140.4	96.0	45.0	30.6	15.0
7 GroE 175	NVGR020175WC0FA	316.4	316.4	252.0	221.2	196.0	163.8	112.0	52.5	35.7	17.5
8 GroE 200	NVGR020200WC0FA	361.6	361.6	288.0	252.8	224.0	187.2	128.0	60.0	40.8	20.0
9 GroE 225	NVGR020225WC0FA	406.8	406.8	324.0	284.4	252.0	210.6	144.0	67.5	45.9	22.5
10 GroE 250	NVGR020250WC0FA	452.0	452.0	360.0	316.0	280.0	234.0	160.0	75.0	51.0	25.0
11 GroE 275	NVGR020275WC0FA	497.2	497.2	396.0	347.6	308.0	257.4	176.0	82.5	56.1	27.5
12 GroE 300	NVGR020300WC0FA	542.4	542.4	432.0	379.2	336.0	280.8	192.0	90.0	61.2	30.0
13 GroE 325	NVGR020325WC0FA	587.6	587.6	468.0	410.8	364.0	304.2	208.0	97.5	66.3	32.5
14 GroE 350	NVGR020350WC0FA	632.8	632.8	504.0	442.4	392.0	327.6	224.0	105.0	71.4	35.0
15 GroE 375	NVGR020375WC0FA	678.0	678.0	540.0	474.0	420.0	351.0	240.0	112.5	76.5	37.5
16 GroE 400	NVGR020400WC0FA	723.2	723.2	576.0	505.6	448.0	374.4	256.0	120.0	81.6	40.0
17 GroE 425	NVGR020425WC0FA	768.4	768.4	612.0	537.2	476.0	397.8	272.0	127.5	86.7	42.5
18 GroE 450	NVGR020450WC0FA	813.6	813.6	648.0	568.8	504.0	421.2	288.0	135.0	91.8	45.0
5 GroE 500	NVGR020500WC0FA	570.0	570.0	555.0	500.0	457.5	390.0	280.0	137.5	92.5	53.5
6 GroE 600	NVGR020600WC0FA	684.0	684.0	666.0	600.0	549.0	468.0	336.0	165.0	111.0	64.2
7 GroE 700	NVGR020700WC0FA	798.0	798.0	777.0	700.0	640.5	546.0	392.0	192.5	129.5	74.9
8 GroE 800	NVGR020800WC0FA	912.0	912.0	888.0	800.0	732.0	624.0	448.0	220.0	148.0	85.6
9 GroE 900	NVGR020900WC0FA	1026.0	1026.0	999.0	900.0	823.5	702.0	504.0	247.5	166.5	96.3
10 GroE 1000	NVGR021000WC0FA	1140.0	1140.0	1110.0	1000.0	915.0	780.0	560.0	275.0	185.0	107.0
11 GroE 1100	NVGR021100WC0FA	1254.0	1254.0	1221.0	1100.0	1006.5	858.0	616.0	302.5	203.5	117.7
12 GroE 1200	NVGR021200WC0FA	1368.0	1368.0	1332.0	1200.0	1098.0	936.0	672.0	330.0	222.0	128.4
13 GroE 1300	NVGR021300WC0FA	1482.0	1482.0	1443.0	1300.0	1189.5	1014.0	728.0	357.5	240.5	139.1
14 GroE 1400	NVGR021400WC0FA	1596.0	1596.0	1554.0	1400.0	1281.0	1092.0	784.0	385.0	259.0	149.8
15 GroE 1500	NVGR021500WC0FA	1710.0	1710.0	1665.0	1500.0	1372.5	1170.0	840.0	412.5	277.5	160.5
16 GroE 1600	NVGR021600WC0FA	1824.0	1824.0	1776.0	1600.0	1464.0	1248.0	896.0	440.0	296.0	171.2
17 GroE 1700	NVGR021700WC0FA	1938.0	1938.0	1887.0	1700.0	1555.5	1326.0	952.0	467.5	314.5	181.9
18 GroE 1800	NVGR021800WC0FA	2052.0	2052.0	1998.0	1800.0	1647.0	1404.0	1008.0	495.0	333.0	192.6
19 GroE 1900	NVGR021900WC0FA	2166.0	2166.0	2109.0	1900.0	1738.5	1482.0	1064.0	522.5	351.5	203.3
20 GroE 2000	NVGR022000WC0FA	2280.0	2280.0	2220.0	2000.0	1830.0	1560.0	1120.0	550.0	370.0	214.0
21 GroE 2100	NVGR022100WC0FA	2394.0	2394.0	2331.0	2100.0	1921.5	1638.0	1176.0	577.5	388.5	224.7
22 GroE 2200	NVGR022200WC0FA	2508.0	2508.0	2442.0	2200.0	2013.0	1716.0	1232.0	605.0	407.0	235.4
23 GroE 2300	NVGR022300WC0FA	2622.0	2622.0	2553.0	2300.0	2104.5	1794.0	1288.0	632.5	425.5	246.1
24 GroE 2400	NVGR022400WC0FA	2736.0	2736.0	2664.0	2400.0	2196.0	1872.0	1344.0	660.0	444.0	256.8
25 GroE 2500	NVGR022500WC0FA	2850.0	2850.0	2775.0	2500.0	2287.5	1950.0	1400.0	687.5	462.5	267.5
26 GroE 2600	NVGR022600WC0FA	2964.0	2964.0	2886.0	2600.0	2279.0	2028.0	1456.0	715.0	481.0	278.2

Classic GroE

Constant current discharge

1.825 Vpc – Discharge in A at 20 °C

Type	Part number	1 min	5 min	10 min	15 min	20 min	30 min	1 h	3 h	5 h	10 h
3 GroE 75	NVGR020075WC0FA	106.8	106.8	96.0	86.4	77.4	66.0	45.3	20.1	14.7	7.2
4 GroE 100	NVGR020100WC0FA	142.4	142.4	128.0	115.2	103.2	88.0	60.4	26.8	19.6	9.6
5 GroE 125	NVGR020125WC0FA	178.0	178.0	160.0	144.0	129.0	110.0	75.5	33.5	24.5	12.0
6 GroE 150	NVGR020150WC0FA	213.6	213.6	192.0	172.8	154.8	132.0	90.6	40.2	29.4	14.4
7 GroE 175	NVGR020175WC0FA	249.2	249.2	224.0	201.6	180.6	154.0	105.7	46.9	34.3	16.8
8 GroE 200	NVGR020200WC0FA	284.8	284.8	256.0	230.4	206.4	176.0	120.8	53.6	39.2	19.2
9 GroE 225	NVGR020225WC0FA	320.4	320.4	288.0	259.2	232.2	198.0	135.9	60.3	44.1	21.6
10 GroE 250	NVGR020250WC0FA	356.0	356.0	320.0	288.0	258.0	220.0	151.0	67.0	49.0	24.0
11 GroE 275	NVGR020275WC0FA	391.6	391.6	352.0	316.8	283.8	242.0	166.1	73.7	53.9	26.4
12 GroE 300	NVGR020300WC0FA	427.2	427.2	384.0	345.6	309.6	264.0	181.2	80.4	58.8	28.8
13 GroE 325	NVGR020325WC0FA	462.8	462.8	416.0	374.4	335.4	286.0	196.3	87.1	63.7	31.2
14 GroE 350	NVGR020350WC0FA	498.4	498.4	448.0	403.2	361.2	308.0	211.4	93.8	68.6	33.6
15 GroE 375	NVGR020375WC0FA	534.0	534.0	480.0	432.0	387.0	330.0	226.5	100.5	73.5	36.0
16 GroE 400	NVGR020400WC0FA	569.6	569.6	512.0	460.8	412.8	352.0	241.6	107.2	78.4	38.4
17 GroE 425	NVGR020425WC0FA	605.2	605.2	544.0	489.6	438.6	374.0	256.7	113.9	83.3	40.8
18 GroE 450	NVGR020450WC0FA	640.8	640.8	576.0	518.4	464.4	396.0	271.8	120.6	88.2	43.2
5 GroE 500	NVGR020500WC0FA	500.0	500.0	480.0	460.0	412.5	355.0	257.5	132.5	91.0	51.5
6 GroE 600	NVGR020600WC0FA	600.0	600.0	576.0	552.0	495.0	426.0	309.0	159.0	109.2	61.8
7 GroE 700	NVGR020700WC0FA	700.0	700.0	672.0	644.0	577.5	497.0	360.5	185.5	127.4	72.1
8 GroE 800	NVGR020800WC0FA	800.0	800.0	768.0	736.0	660.0	568.0	412.0	212.0	145.6	82.4
9 GroE 900	NVGR020900WC0FA	900.0	900.0	864.0	828.0	742.5	639.0	463.5	238.5	163.8	92.7
10 GroE 1000	NVGR021000WC0FA	1000.0	1000.0	960.0	920.0	825.0	710.0	515.0	265.0	182.0	103.0
11 GroE 1100	NVGR021100WC0FA	1100.0	1100.0	1056.0	1012.0	907.5	781.0	566.5	291.5	200.2	113.3
12 GroE 1200	NVGR021200WC0FA	1200.0	1200.0	1152.0	1104.0	990.0	852.0	618.0	318.0	218.4	123.6
13 GroE 1300	NVGR021300WC0FA	1300.0	1300.0	1248.0	1196.0	1072.5	923.0	669.5	344.5	236.6	133.9
14 GroE 1400	NVGR021400WC0FA	1400.0	1400.0	1344.0	1288.0	1155.0	994.0	721.0	371.0	254.8	144.2
15 GroE 1500	NVGR021500WC0FA	1500.0	1500.0	1440.0	1380.0	1273.5	1065.0	772.5	397.5	273.0	154.5
16 GroE 1600	NVGR021600WC0FA	1600.0	1600.0	1536.0	1472.0	1320.0	1136.0	824.0	424.0	291.2	164.8
17 GroE 1700	NVGR021700WC0FA	1700.0	1700.0	1632.0	1564.0	1402.5	1207.0	875.5	450.5	309.4	175.1
18 GroE 1800	NVGR021800WC0FA	1800.0	1800.0	1728.0	1656.0	1485.0	1278.0	927.0	477.0	327.6	185.4
19 GroE 1900	NVGR021900WC0FA	1900.0	1900.0	1824.0	1748.0	1567.5	1349.0	978.5	503.5	345.8	195.7
20 GroE 2000	NVGR022000WC0FA	2000.0	2000.0	1920.0	1840.0	1650.0	1420.0	1030.0	530.0	364.0	206.0
21 GroE 2100	NVGR022100WC0FA	2100.0	2100.0	2016.0	1932.0	1732.5	1491.0	1081.5	556.5	382.2	216.3
22 GroE 2200	NVGR022200WC0FA	2200.0	2200.0	2112.0	2024.0	1815.0	1562.0	1133.0	583.0	400.4	226.6
23 GroE 2300	NVGR022300WC0FA	2300.0	2300.0	2208.0	2116.0	1897.5	1633.0	1184.5	609.5	418.6	236.9
24 GroE 2400	NVGR022400WC0FA	2400.0	2400.0	2304.0	2208.0	1980.0	1704.0	1236.0	636.0	436.8	247.2
25 GroE 2500	NVGR022500WC0FA	2500.0	2500.0	2400.0	2300.0	2062.5	1775.0	1287.5	662.5	455.0	257.5
26 GroE 2600	NVGR022600WC0FA	2600.0	2600.0	2496.0	2392.0	2145.0	1846.0	1339.0	689.0	473.2	267.8

Classic GroE

Constant current discharge

1.85 Vpc – Discharge in A at 20 °C

Type	Part number	1 min	5 min	10 min	15 min	20 min	30 min	1 h	3 h	5 h	10 h
3 GroE 75	NVGR020075WC0FA	93.0	93.0	93.0	78.0	70.2	60.0	42.0	19.8	14.4	7.2
4 GroE 100	NVGR020100WC0FA	124.0	124.0	124.0	104.0	93.6	80.0	56.0	26.4	19.2	9.6
5 GroE 125	NVGR020125WC0FA	155.0	155.0	155.0	130.0	117.0	100.0	70.0	33.0	24.0	12.0
6 GroE 150	NVGR020150WC0FA	186.0	186.0	186.0	156.0	140.4	120.0	84.0	39.6	28.8	14.4
7 GroE 175	NVGR020175WC0FA	217.0	217.0	217.0	182.0	163.8	140.0	98.0	46.2	33.6	16.8
8 GroE 200	NVGR020200WC0FA	248.0	248.0	248.0	208.0	187.2	160.0	112.0	52.8	38.4	19.2
9 GroE 225	NVGR020225WC0FA	279.0	279.0	279.0	234.0	210.6	180.0	126.0	59.4	43.2	21.6
10 GroE 250	NVGR020250WC0FA	310.0	310.0	310.0	260.0	234.0	200.0	140.0	66.0	48.0	24.0
11 GroE 275	NVGR020275WC0FA	341.0	341.0	341.0	286.0	257.4	220.0	154.0	72.6	52.8	26.4
12 GroE 300	NVGR020300WC0FA	372.0	372.0	372.0	312.0	280.8	240.0	168.0	79.2	57.6	28.8
13 GroE 325	NVGR020325WC0FA	403.0	403.0	403.0	338.0	304.2	260.0	182.0	85.8	62.4	31.2
14 GroE 350	NVGR020350WC0FA	434.0	434.0	434.0	364.0	327.6	280.0	196.0	92.4	67.2	33.6
15 GroE 375	NVGR020375WC0FA	465.0	465.0	465.0	390.0	351.0	300.0	210.0	99.0	72.0	36.0
16 GroE 400	NVGR020400WC0FA	496.0	496.0	496.0	416.0	374.4	320.0	224.0	105.6	76.8	38.4
17 GroE 425	NVGR020425WC0FA	527.0	527.0	527.0	442.0	397.8	340.0	238.0	112.2	81.6	40.8
18 GroE 450	NVGR020450WC0FA	558.0	558.0	558.0	468.0	421.2	360.0	252.0	118.8	86.4	43.2
5 GroE 500	NVGR020500WC0FA	450.0	450.0	450.0	420.0	375.0	330.0	245.0	130.0	91.0	50.0
6 GroE 600	NVGR020600WC0FA	540.0	540.0	540.0	504.0	450.0	396.0	294.0	156.0	109.2	60.0
7 GroE 700	NVGR020700WC0FA	630.0	630.0	630.0	588.0	525.0	462.0	343.0	182.0	127.4	70.0
8 GroE 800	NVGR020800WC0FA	720.0	720.0	720.0	672.0	600.0	528.0	392.0	208.0	145.6	80.0
9 GroE 900	NVGR020900WC0FA	810.0	810.0	810.0	756.0	675.0	594.0	441.0	234.0	163.8	90.0
10 GroE 1000	NVGR021000WC0FA	900.0	900.0	900.0	840.0	750.0	660.0	490.0	260.0	182.0	100.0
11 GroE 1100	NVGR021100WC0FA	990.0	990.0	990.0	924.0	825.0	726.0	539.0	286.0	200.2	110.0
12 GroE 1200	NVGR021200WC0FA	1080.0	1080.0	1080.0	1008.0	900.0	792.0	588.0	312.0	218.4	120.0
13 GroE 1300	NVGR021300WC0FA	1170.0	1170.0	1170.0	1092.0	975.0	858.0	637.0	338.0	236.6	130.0
14 GroE 1400	NVGR021400WC0FA	1260.0	1260.0	1260.0	1176.0	1050.0	924.0	686.0	364.0	254.8	140.0
15 GroE 1500	NVGR021500WC0FA	1350.0	1350.0	1350.0	1260.0	1125.0	990.0	735.0	390.0	273.0	150.0
16 GroE 1600	NVGR021600WC0FA	1440.0	1440.0	1440.0	1344.0	1200.0	1056.0	784.0	416.0	291.2	160.0
17 GroE 1700	NVGR021700WC0FA	1530.0	1530.0	1530.0	1428.0	1275.0	1122.0	833.0	442.0	309.4	170.0
18 GroE 1800	NVGR021800WC0FA	1620.0	1620.0	1620.0	1512.0	1350.0	1188.0	882.0	468.0	327.6	180.0
19 GroE 1900	NVGR021900WC0FA	1710.0	1710.0	1710.0	1596.0	1425.0	1254.0	931.0	494.0	345.8	190.0
20 GroE 2000	NVGR022000WC0FA	1800.0	1800.0	1800.0	1680.0	1500.0	1320.0	980.0	520.0	364.0	200.0
21 GroE 2100	NVGR022100WC0FA	1890.0	1890.0	1890.0	1764.0	1575.0	1386.0	1029.0	546.0	382.2	210.0
22 GroE 2200	NVGR022200WC0FA	1980.0	1980.0	1980.0	1848.0	1650.0	1452.0	1078.0	572.0	400.4	220.0
23 GroE 2300	NVGR022300WC0FA	2070.0	2070.0	2070.0	1932.0	1725.0	1518.0	1127.0	598.0	418.6	230.0
24 GroE 2400	NVGR022400WC0FA	2160.0	2160.0	2160.0	2016.0	1800.0	1584.0	1176.0	624.0	436.8	240.0
25 GroE 2500	NVGR022500WC0FA	2250.0	2250.0	2250.0	2100.0	1875.0	1650.0	1225.0	650.0	455.0	250.0
26 GroE 2600	NVGR022600WC0FA	2340.0	2340.0	2340.0	2184.0	1950.0	1716.0	1274.0	676.0	473.2	260.0

Classic GroE

Constant current discharge

1.90 Vpc – Discharge in A at 20 °C

Type	Part number	1 min	5 min	10 min	15 min	20 min	30 min	1 h	3 h	5 h	10 h
3 GroE 75	NVGR020075WC0FA	55.5	55.5	55.5	55.5	51.9	45.9	34.5	18.6	10.8	6.6
4 GroE 100	NVGR020100WC0FA	74.0	74.0	74.0	74.0	69.2	61.2	46.0	24.8	14.4	8.8
5 GroE 125	NVGR020125WC0FA	92.5	92.5	92.5	92.5	86.5	76.5	57.5	31.0	18.0	11.0
6 GroE 150	NVGR020150WC0FA	111.0	111.0	111.0	111.0	103.8	91.8	69.0	37.2	21.6	13.2
7 GroE 175	NVGR020175WC0FA	129.5	129.5	129.5	129.5	121.1	107.1	80.5	43.4	25.2	15.4
8 GroE 200	NVGR020200WC0FA	148.0	148.0	148.0	148.0	138.4	122.4	92.0	49.6	28.8	17.6
9 GroE 225	NVGR020225WC0FA	166.5	166.5	166.5	166.5	155.7	137.7	103.5	55.8	32.4	19.8
10 GroE 250	NVGR020250WC0FA	185.0	185.0	185.0	185.0	173.0	153.0	115.0	62.0	36.0	22.0
11 GroE 275	NVGR020275WC0FA	203.5	203.5	203.5	203.5	190.3	168.3	126.5	68.2	39.6	24.2
12 GroE 300	NVGR020300WC0FA	222.0	222.0	222.0	222.0	207.6	183.6	138.0	74.4	43.2	26.4
13 GroE 325	NVGR020325WC0FA	240.5	240.5	240.5	240.5	224.9	198.9	149.5	80.6	46.8	28.6
14 GroE 350	NVGR020350WC0FA	259.0	259.0	259.0	259.0	242.2	214.2	161.0	86.8	50.4	30.8
15 GroE 375	NVGR020375WC0FA	277.5	277.5	277.5	277.5	259.5	229.5	172.5	93.0	54.0	33.0
16 GroE 400	NVGR020400WC0FA	296.0	296.0	296.0	296.0	276.8	244.8	184.0	99.2	57.6	35.2
17 GroE 425	NVGR020425WC0FA	314.5	314.5	314.5	314.5	294.1	260.1	195.5	105.4	61.2	37.4
18 GroE 450	NVGR020450WC0FA	333.0	333.0	333.0	333.0	311.4	275.4	207.0	111.6	64.8	39.6
5 GroE 500	NVGR020500WC0FA	250.0	250.0	250.0	250.0	242.5	227.5	200.0	106.5	76.5	45.5
6 GroE 600	NVGR020600WC0FA	300.0	300.0	300.0	300.0	291.0	273.0	240.0	127.8	91.8	54.6
7 GroE 700	NVGR020700WC0FA	350.0	350.0	350.0	350.0	339.5	318.5	280.0	149.1	107.1	63.7
8 GroE 800	NVGR020800WC0FA	400.0	400.0	400.0	400.0	388.0	364.0	320.0	170.4	122.4	72.8
9 GroE 900	NVGR020900WC0FA	450.0	450.0	450.0	450.0	436.5	409.5	360.0	191.7	137.7	81.9
10 GroE 1000	NVGR021000WC0FA	500.0	500.0	500.0	500.0	485.0	455.0	400.0	213.0	153.0	91.0
11 GroE 1100	NVGR021100WC0FA	550.0	550.0	550.0	550.0	533.5	500.5	440.0	234.3	168.3	100.1
12 GroE 1200	NVGR021200WC0FA	600.0	600.0	600.0	600.0	582.0	546.0	480.0	255.6	183.6	109.2
13 GroE 1300	NVGR021300WC0FA	650.0	650.0	650.0	650.0	630.5	591.5	520.0	276.9	198.9	118.3
14 GroE 1400	NVGR021400WC0FA	700.0	700.0	700.0	700.0	679.0	637.0	560.0	298.2	214.2	127.4
15 GroE 1500	NVGR021500WC0FA	750.0	750.0	750.0	750.0	727.5	682.5	600.0	319.5	229.5	136.5
16 GroE 1600	NVGR021600WC0FA	800.0	800.0	800.0	800.0	776.0	728.0	640.0	340.5	244.8	145.6
17 GroE 1700	NVGR021700WC0FA	850.0	850.0	850.0	850.0	824.5	773.5	680.0	362.1	260.1	154.7
18 GroE 1800	NVGR021800WC0FA	900.0	900.0	900.0	900.0	873.0	819.0	720.0	383.4	275.4	163.8
19 GroE 1900	NVGR021900WC0FA	950.0	950.0	950.0	950.0	921.5	864.5	760.0	404.7	290.7	172.9
20 GroE 2000	NVGR022000WC0FA	1000.0	1000.0	1000.0	1000.0	970.0	910.0	800.0	426.0	306.0	182.0
21 GroE 2100	NVGR022100WC0FA	1050.0	1050.0	1050.0	1050.0	1018.5	955.5	840.0	447.3	321.3	191.1
22 GroE 2200	NVGR022200WC0FA	1100.0	1100.0	1100.0	1100.0	1067.0	1001.0	880.0	468.6	336.6	200.2
23 GroE 2300	NVGR022300WC0FA	1150.0	1150.0	1150.0	1150.0	1115.5	1046.5	920.0	489.9	351.9	209.3
24 GroE 2400	NVGR022400WC0FA	1200.0	1200.0	1200.0	1200.0	1164.0	1092.0	960.0	511.2	367.2	218.4
25 GroE 2500	NVGR022500WC0FA	1250.0	1250.0	1250.0	1250.0	1212.5	1137.5	1000.0	532.5	382.5	227.5
26 GroE 2600	NVGR022600WC0FA	1300.0	1300.0	1300.0	1300.0	1261.0	1183.0	1040.0	553.8	397.8	236.6

GNB® INDUSTRIAL POWER
A Division of Exide Technologies

Exide Technologies, with operations in more than 80 countries, is one of the world's largest producers and recyclers of lead-acid batteries. Exide Technologies provides a comprehensive and customized range of stored electrical energy solutions. Based on over 120 years of experience in the development of innovative technologies, Exide Technologies is an esteemed partner of OEMs and serves the spare parts market for industrial and automotive applications.

GNB Industrial Power – A division of Exide Technologies – offers an extensive range of storage products and services, including solutions for telecommunication systems, railway applications, mining, photovoltaic (solar energy), uninterrupted power supply (UPS), electrical power generation and distribution, fork lifts and electric vehicles.

Exide Technologies takes pride in its commitment to a better environment. An integrated approach to manufacturing, distributing and recycling of lead-acid batteries has been developed to ensure a safe and responsible life cycle for all of its products.

NXCZSTEPDF00215 Subjects to alterations

GNB® INDUSTRIAL POWER devises enduring energy concepts that convince with efficiency, flexibility and profitability.

www.gnb.com