GNB INDUSTRIAL POWER
A Division of Exide Technologies

# Industrial Batteries / Network Power

## Classic Solar

*»**Powerful energy storage** for renewable energy systems«*

Classic®

GNB INDUSTRIAL POWER

# Industrial Batteries

## The powerful range of network power

**GNB® Industrial Power offers reliable energy storage solutions for critical systems requiring uninterrupted power supply. With a comprehensive product range based on state-of-the-art technologies, GNB delivers the right battery for every application.**

The below table is only indicative and depends on the specific customer application. For more information please ask a GNB sales representative.

| APPLICATIONS | BATTERY RANGES | | | | | | | | | | | | | | | | | | |
|---|---|---|---|---|---|---|---|---|---|---|---|---|---|---|---|---|---|---|---|
| | Sonnenschein | | | | | | Marathon | | | Sprinter | | Absolyte | Powerfit | Classic | | | | | |
| | A400/ A600 | A400 FT | A500 | SOLAR | RAIL | Power Cycle | M-FT | FTX | L/XL | P/XP | XP-FT | GP/GX | S100/ S100L/ S300 | OCSM | OPzS | Energy Bloc/OGi | OPzS Solar | EnerSol | rail |
| UPS Data Centre | ● | ● | ● | | | ● | ● | ● | ● | ● | ● | ● | | ● | | ● | | | |
| Industrial UPS | ● | ● | ● | | | ● | ● | ● | ● | ● | ● | ● | | ● | | ● | | | |
| Telecom Good grid | ● | ● | | | | ● | ● | ● | ● | | ● | | | | ● | ● | | | |
| Telecom Poor & Off-grid | | | | ● | | ● | | | | | | ● | | ● | | | ● | | |
| Renewable | | | | ● | | ● | | | | | | ● | | | | | ● | ● | |
| Emergency lighting | ● | ● | ● | | | ● | ● | ● | ● | ● | ● | | ● | | ● | ● | | | |
| Security | ● | | ● | | | | | | | ● | ● | | ● | ● | ● | | | | |
| Utility | ● | ● | | | | ● | ● | ● | ● | | | ● | | ● | ● | ● | | | |
| Railways | ● | ● | ● | | ● | ● | ● | | ● | | | ● | | ● | | ● | | | ● |

## Powerful product brands

ABSOLYTE MARATHON Sprinter Powerfit

- VRLA batteries (Valve Regulated Lead Acid) in which the electrolyte is fixed in an Absorbent Glass Mat (AGM)
- Excellent high current capability
- Very economical
- Maintenance-free (no topping up)

Sonnenschein

- VRLA batteries (Valve Regulated Lead Acid) in which the electrolyte is fixed in a gel (dryfit® technology)
- Inventor of Gel technology
- Highest reliability, even in non-optimal conditions
- Particularly suitable for cyclic applications
- Maintenance-free (no topping up)

Classic®

- Conventional lead-acid batteries with liquid electrolyte
- Extreme reliability, proven over decades
- Low maintenance

# Classic OPzS Solar

## Energy storage for outstanding power applications

**The Classic OPzS Solar range has been well proven for decades in medium and large power applications. Due to their robustness, long design life and high operational safety they are ideally suitable for use in solar and wind power stations, telecommunications, power distribution companies, railways and many other safety equipment power supplies. The wide range of available capacities and sizes provides a solution for every power need, even in harsh environments.**

## Your benefits:

> **Optimised design for renewable energy applications** – highest cycling ability and long life

> **Special alloy and large electrolyte reserve** – very long topping up intervals

> **Low maintenance** – saving costs

> **Completely recyclable** – low $CO_2$ footprint

## Specifications:

> Nominal capacity ($C_{120}$ at 25 °C): 82.7 - 4600 Ah
> Very thick tubular positive plates for the most demanding applications
> Up to 2800 cycles at 60 % depth of discharge ($C_{10}$) with IU charging profile at 20 °C. For enhanced performance and for systems ≥ 48 V we recommend IUI charging to reach 3000 cycles and more.
> Designed in accordance with IEC 61427 and IEC 60896-11
> Screw connectors for a better contact and reliability
> Also available in dry-charged version with separate electrolyte
> High quality transparent or translucent containers for easy maintenance

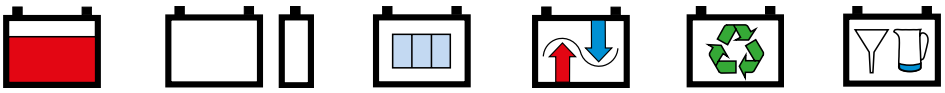

Nominal capacity 82.7 – 4600 Ah | Block battery/ Single cell | Tubular plate | up to 3000*+ cycles at 60 % depth of discharge | Recyclable | Low maintenance

*Using IUI charging at 20 °Cöä

GNB INDUSTRIAL POWER
A Division of Exide Technologies

# Classic OPzS Solar

## Technical data

## Technical characteristics and data

| Type | Part number | Nom. voltage V | Nominal capacity $C_{120}$ 1.85 Vpc 25 °C Ah | Length (l) max. mm | Width (b/w) max. mm | Height* (h) max. mm | Installed length (L) max. mm | Weight incl. acid *** approx. kg | Weight acid** approx. kg | Internal resistance mOhm | Short circuit current A | Terminal | Pole pairs |
|---|---|---|---|---|---|---|---|---|---|---|---|---|---|
| OPzS Solar 190 | NVSL020190WC0FB | 2 | 190 | 105 | 208 | 395 | 115 | 13.7 | 5.20 | 1.45 | 1400 | F-M8 | 1 |
| OPzS Solar 245 | NVSL020245WC0FB | 2 | 245 | 105 | 208 | 395 | 115 | 15.2 | 5.00 | 1.05 | 1950 | F-M8 | 1 |
| OPzS Solar 305 | NVSL020305WC0FB | 2 | 305 | 105 | 208 | 395 | 115 | 16.6 | 4.60 | 0.83 | 2450 | F-M8 | 1 |
| OPzS Solar 380 | NVSL020380WC0FB | 2 | 380 | 126 | 208 | 395 | 136 | 20.0 | 5.80 | 0.72 | 2850 | F-M8 | 1 |
| OPzS Solar 450 | NVSL020450WC0FB | 2 | 450 | 147 | 208 | 395 | 157 | 23.3 | 6.90 | 0.63 | 3250 | F-M8 | 1 |
| OPzS Solar 550 | NVSL020550WC0FB | 2 | 550 | 126 | 208 | 511 | 136 | 26.7 | 8.10 | 0.63 | 3250 | F-M8 | 1 |
| OPzS Solar 660 | NVSL020660WC0FB | 2 | 660 | 147 | 208 | 511 | 157 | 31.0 | 9.30 | 0.56 | 3650 | F-M8 | 1 |
| OPzS Solar 765 | NVSL020765WC0FB | 2 | 765 | 168 | 208 | 511 | 178 | 35.4 | 10.8 | 0.50 | 4100 | F-M8 | 1 |
| OPzS Solar 985 | NVSL020985WC0FC | 2 | 985 | 147 | 208 | 686 | 157 | 43.9 | 13.0 | 0.47 | 4350 | F-M8 | 1 |
| OPzS Solar 1080 | NVSL021080WC0FC | 2 | 1080 | 147 | 208 | 686 | 157 | 47.2 | 12.8 | 0.43 | 4800 | F-M8 | 1 |
| OPzS Solar 1320 | NVSL021320WC0FB | 2 | 1320 | 212 | 193 | 686 | 222 | 59.9 | 17.1 | 0.30 | 6800 | F-M8 | 2 |
| OPzS Solar 1410 | NVSL021410WC0FB | 2 | 1410 | 212 | 193 | 686 | 222 | 63.4 | 16.8 | 0.27 | 7500 | F-M8 | 2 |
| OPzS Solar 1650 | NVSL021650WC0FB | 2 | 1650 | 212 | 235 | 686 | 222 | 73.2 | 21.7 | 0.26 | 7900 | F-M8 | 2 |
| OPzS Solar 1990 | NVSL021990WC0FB | 2 | 1990 | 212 | 277 | 686 | 222 | 86.4 | 26.1 | 0.23 | 8900 | F-M8 | 2 |
| OPzS Solar 2350 | NVSL022350WC0FB | 2 | 2350 | 212 | 277 | 836 | 222 | 108 | 33.7 | 0.24 | 8500 | F-M8 | 2 |
| OPzS Solar 2500 | NVSL022500WC0FB | 2 | 2500 | 212 | 277 | 836 | 222 | 114 | 32.7 | 0.22 | 9300 | F-M8 | 2 |
| OPzS Solar 3100 | NVSL023100WC0FA | 2 | 3100 | 215 | 400 | 812 | 225 | 151 | 50.0 | 0.16 | 12800 | F-M8 | 3 |
| OPzS Solar 3350 | NVSL023350WC0FA | 2 | 3350 | 215 | 400 | 812 | 225 | 158 | 48.0 | 0.14 | 14600 | F-M8 | 3 |
| OPzS Solar 3850 | NVSL023850WC0FA | 2 | 3850 | 215 | 490 | 812 | 225 | 184 | 60.0 | 0.12 | 17000 | F-M8 | 4 |
| OPzS Solar 4100 | NVSL024100WC0FA | 2 | 4100 | 215 | 490 | 812 | 225 | 191 | 58.0 | 0.11 | 17800 | F-M8 | 4 |
| OPzS Solar 4600 | NVSL024600WC0FA | 2 | 4600 | 215 | 580 | 812 | 225 | 217 | 71.0 | 0.11 | 18600 | F-M8 | 4 |
| 6V 4 OPzS 200 LA | NVZS060200WC0FB | 6 | 294 | 272 | 206 | 347 | 282 | 41.0 | 13.0 | 2.68 | 2283 | F-M8 | 1 |
| 6V 5 OPzS 250 LA | NVZS060250WC0FB | 6 | 364 | 380 | 206 | 347 | 392 | 56.0 | 20.0 | 2.39 | 2800 | F-M8 | 1 |
| 6V 6 OPzS 300 LA | NVZS060300WC0FB | 6 | 417 | 380 | 206 | 347 | 392 | 63.0 | 20.0 | 1.96 | 3106 | F-M8 | 1 |
| 12V 1 OPzS 50 LA | NVZS120050WC0FB | 12 | 82.7 | 272 | 206 | 347 | 282 | 35.0 | 15.0 | 18.1 | 688 | F-M8 | 1 |
| 12V 2 OPzS 100 LA | NVZS120100WC0FB | 12 | 139 | 272 | 206 | 347 | 282 | 45.0 | 14.0 | 9.26 | 1314 | F-M8 | 1 |
| 12V 3 OPzS 150 LA | NVZS120150WC0FB | 12 | 210 | 380 | 206 | 347 | 392 | 64.0 | 19.0 | 6.46 | 1884 | F-M8 | 1 |

| Type | $C_6$ 1.75 Vpc | $C_{10}$ 1.80 Vpc | $C_{12}$ 1.80 Vpc | $C_{24}$ 1.80 Vpc | $C_{48}$ 1.80 Vpc | $C_{72}$ 1.80 Vpc | $C_{100}$ 1.85 Vpc | $C_{120}$ 1.85 Vpc | $C_{240}$ 1.85 Vpc |
|---|---|---|---|---|---|---|---|---|---|
| OPzS Solar 190 | 122 | 132 | 134 | 145 | 165 | 175 | 185 | 190 | 200 |
| OPzS Solar 245 | 159 | 173 | 176 | 190 | 215 | 230 | 240 | 245 | 260 |
| OPzS Solar 305 | 203 | 220 | 224 | 240 | 270 | 285 | 300 | 305 | 320 |
| OPzS Solar 380 | 250 | 273 | 277 | 300 | 330 | 350 | 370 | 380 | 400 |
| OPzS Solar 450 | 296 | 325 | 330 | 355 | 395 | 420 | 440 | 450 | 470 |
| OPzS Solar 550 | 353 | 391 | 398 | 430 | 480 | 515 | 540 | 550 | 580 |
| OPzS Solar 660 | 422 | 469 | 477 | 515 | 575 | 615 | 645 | 660 | 695 |
| OPzS Solar 765 | 492 | 546 | 555 | 600 | 670 | 710 | 750 | 765 | 805 |
| OPzS Solar 985 | 606 | 700 | 710 | 770 | 860 | 920 | 970 | 985 | 1035 |
| OPzS Solar 1080 | 669 | 800 | 812 | 845 | 940 | 1000 | 1055 | 1080 | 1100 |
| OPzS Solar 1320 | 820 | 937 | 950 | 1030 | 1150 | 1230 | 1295 | 1320 | 1385 |
| OPzS Solar 1410 | 888 | 1009 | 1024 | 1105 | 1225 | 1305 | 1380 | 1410 | 1440 |
| OPzS Solar 1650 | 1024 | 1174 | 1190 | 1290 | 1440 | 1540 | 1620 | 1650 | 1730 |
| OPzS Solar 1990 | 1218 | 1411 | 1430 | 1550 | 1730 | 1850 | 1950 | 1990 | 2090 |
| OPzS Solar 2350 | 1573 | 1751 | 1770 | 1910 | 2090 | 2200 | 2300 | 2350 | 2470 |
| OPzS Solar 2500 | 1667 | 1854 | 1875 | 2015 | 2215 | 2335 | 2445 | 2500 | 2600 |
| OPzS Solar 3100 | 2080 | 2318 | 2343 | 2520 | 2755 | 2910 | 3040 | 3100 | 3250 |
| OPzS Solar 3350 | 2268 | 2524 | 2550 | 2740 | 2985 | 3135 | 3280 | 3350 | 3520 |
| OPzS Solar 3850 | 2592 | 2884 | 2915 | 3135 | 3430 | 3615 | 3765 | 3850 | 4040 |
| OPzS Solar 4100 | 2775 | 3090 | 3125 | 3355 | 3650 | 3840 | 4000 | 4100 | 4300 |
| OPzS Solar 4600 | 3099 | 3451 | 3490 | 3765 | 4100 | 4300 | 4500 | 4600 | 4850 |
| 6V 4 OPzS 200 LA | 203 | 206 | 229 | 250 | 296 | 304 | 287 | 294 | 338 |
| 6V 5 OPzS 250 LA | 245 | 257 | 284 | 311 | 374 | 383 | 355 | 364 | 424 |
| 6V 6 OPzS 300 LA | 284 | 309 | 322 | 354 | 420 | 432 | 408 | 417 | 482 |
| 12V 1 OPzS 50 LA | 55.0 | 51.5 | 63.7 | 69.4 | 78.4 | 79.8 | 81.0 | 82.7 | 92.9 |
| 12V 2 OPzS 100 LA | 95.4 | 103 | 108 | 118 | 141 | 145 | 136 | 139 | 162 |
| 12V 3 OPzS 150 LA | 131 | 154 | 162 | 177 | 206 | 217 | 203 | 210 | 234 |

Capacities in Ah ($C_6$ – $C_{240}$ at 25 °C)

* Includes installed connector, the above mentioned height can differ depending on the used vent(s).
** Acid density $d_N$ = 1.24 kg/l
*** Filled and charged cell weights +/- 5%

## Terminal and torque

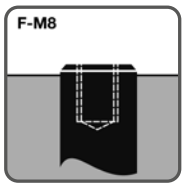


12 Nm for blocks;
20 Nm for cells

Data is also valid for dry charged version.
Change »**W**« (Wet) to »**D**« (Dry) in the part number.
E.g.:
**> filled and charged:** NVSL023100 **W** C0FA
**> dry charged:** NVSL023100 **D** C0FA

# Classic OPzS Solar

## Drawings

### Drawings with terminal position

#### 6V 4 OPzS 200 LA – 6V 6 OPzS 300 LA

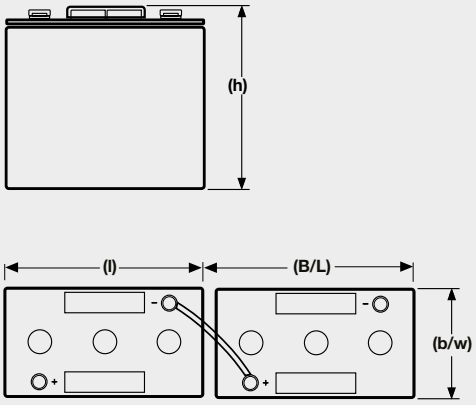


#### 12V 1 OPzS 50 LA – 12V 3 OPzS 150 LA

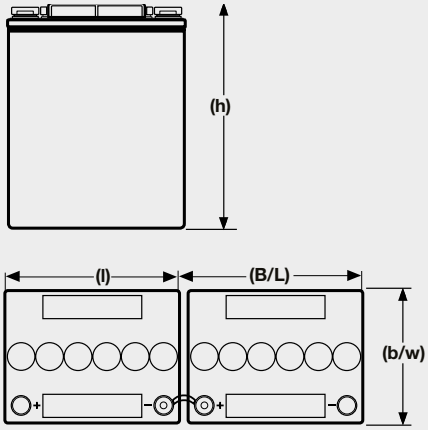


#### OPzS Solar 190 – OPzS Solar 1080

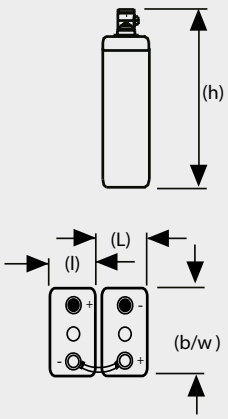


#### OPzS Solar 1320 – OPzS Solar 2500

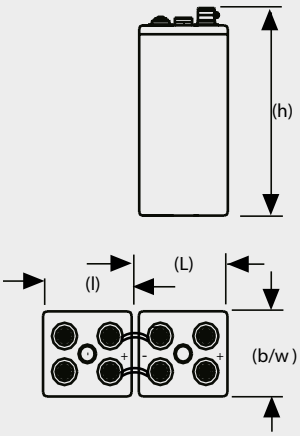


#### OPzS Solar 3100 – OPzS Solar 3350

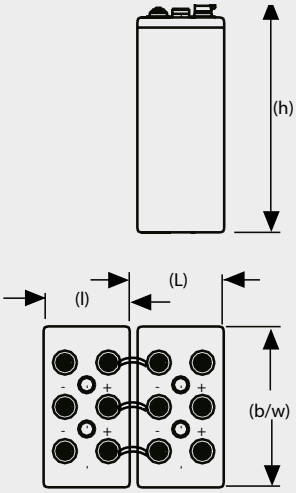


#### OPzS Solar 3850 – OPzS Solar 4600

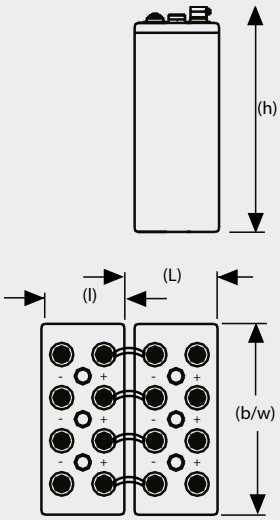


*Not to scale!*

# Classic EnerSol

## Powerful and universal, suitable for every application

**Classic EnerSol batteries are universal, low maintenance energy supplies for medium industrial solar systems. These lead acid batteries with liquid electrolyte are renowned for being safe and reliable due to their high performance. Typical applications are small solar and wind power systems, holiday and weekend houses.**

### Your benefits:

> **Positive tubular plates** – extremely robust design and enhanced cycling performance

> **Low maintenance** – saving costs

> **Completely recyclable** – low $CO_2$ footprint

### Specifications:

> Nominal capacity ($C_{120}$ at 25 °C): 372 - 1106 Ah
> Containers made from translucent plastics for easy topping up
> Screw connectors for a better contact and reliability

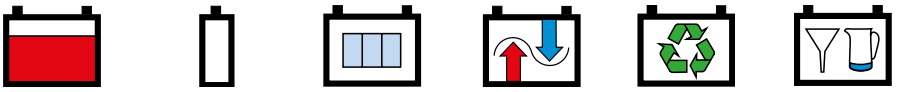

Nominal capacity 372 – 1106 Ah | Single cell | Tubular plate | up to 2000 cycles acc. to IEC 60896-11 (60 % DoD) | Recyclable | Low maintenance

# Classic EnerSol

## Technical data, Drawings

### Technical characteristics and data

| Type | Part number | Nom. voltage V | Nominal capacity $C_{120}$ 1.85 Vpc 25 °C Ah | Length (l) max. mm | Width (b/w) max. mm | Height* (h) max. mm | Installed length (L) max. mm | Weight incl. acid *** approx. kg | Weight acid** approx. kg | Internal resistance mOhm | Short circuit current A | Terminal | Pole pairs |
|---|---|---|---|---|---|---|---|---|---|---|---|---|---|
| 03 EnerSol 380 | NVTS020380WC0FB | 2 | 372 | 83.0 | 198 | 503 | 93.0 | 17.5 | 6.9 | 0.83 | 2462 | F-M10 | 1 |
| 04 EnerSol 490 | NVTS020490WC0FB | 2 | 486 | 101 | 198 | 503 | 111 | 22.5 | 7.8 | 0.69 | 2962 | F-M10 | 1 |
| 05 EnerSol 600 | NVTS020600WC0FB | 2 | 597 | 119 | 198 | 503 | 129 | 27.1 | 8.9 | 0.59 | 3434 | F-M10 | 1 |
| 06 EnerSol 720 | NVTS020720WC0FB | 2 | 720 | 137 | 198 | 503 | 147 | 31.0 | 9.7 | 0.53 | 3824 | F-M10 | 1 |
| 07 EnerSol 840 | NVTS020840WC0FB | 2 | 832 | 155 | 198 | 503 | 165 | 35.5 | 11.0 | 0.47 | 4290 | F-M10 | 1 |
| 08 EnerSol 950 | NVTS020950WC0FB | 2 | 942 | 173 | 198 | 503 | 183 | 39.5 | 12.1 | 0.43 | 4687 | F-M10 | 1 |
| 09 EnerSol 1050 | NVTS021050WC0FB | 2 | 1048 | 191 | 198 | 503 | 201 | 44.0 | 13.3 | 0.40 | 5115 | F-M10 | 1 |
| 10 EnerSol 1110 | NVTS021110WC0FB | 2 | 1106 | 191 | 198 | 503 | 201 | 45.5 | 12.0 | 0.37 | 5485 | F-M10 | 1 |

* The above mentioned height can differ depending on the used vent(s).
**Acid density $d_N$ = 1.26 kg/l
*** Filled and charged cell weights +/- 5%

| Type | $C_6$ 1.75 V/C | $C_{10}$ 1.80 V/C | $C_{12}$ 1.80 V/C | $C_{24}$ 1.80 V/C | $C_{48}$ 1.80 V/C | $C_{72}$ 1.80 V/C | $C_{100}$ 1.85 V/C | $C_{120}$ 1.85 V/C | $C_{240}$ 1.85 V/C |
|---|---|---|---|---|---|---|---|---|---|
| 03 EnerSol 380 | 267 | 285 | 294 | 318 | 351 | 360 | 363 | 372 | 384 |
| 04 EnerSol 490 | 352 | 376 | 388 | 420 | 455 | 473 | 478 | 486 | 512 |
| 05 EnerSol 600 | 436 | 464 | 482 | 518 | 555 | 579 | 587 | 597 | 642 |
| 06 EnerSol 720 | 516 | 552 | 574 | 620 | 669 | 696 | 702 | 720 | 768 |
| 07 EnerSol 840 | 591 | 632 | 658 | 710 | 767 | 802 | 816 | 832 | 899 |
| 08 EnerSol 950 | 668 | 715 | 744 | 804 | 869 | 909 | 924 | 942 | 1019 |
| 09 EnerSol 1050 | 748 | 800 | 834 | 901 | 974 | 1019 | 1037 | 1048 | 1144 |
| 10 EnerSol 1110 | 825 | 874 | 908 | 969 | 1035 | 1076 | 1088 | 1107 | 1182 |

The capacities are given in Ah at 25 °C after 5 cycles.

### Terminal and torque

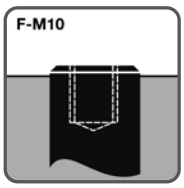


25 Nm

### Drawings with terminal position

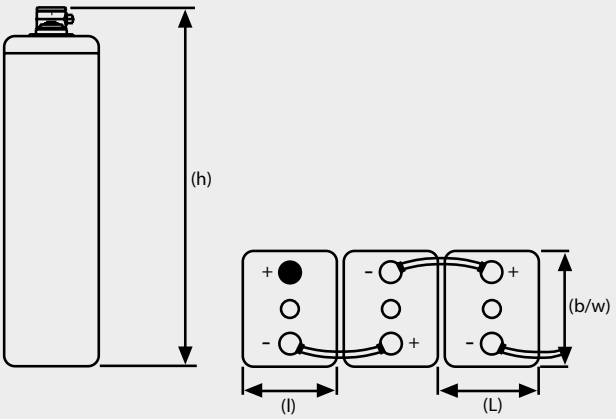


*Not to scale!*

GNB INDUSTRIAL POWER

**Exide Technologies**, with operations in more than 80 countries and more than 130 years of experience, is one of the world's largest producers and recyclers of lead-acid batteries. The company develops state-of-the-art energy storage solutions for the automotive and industrial market. Leading car, truck and lift truck manufacturers trust in Exide Technologies as an original equipment supplier. Exide also serves the aftermarket through a portfolio of successful and well-known brands.

Exide Transportation manufactures batteries for light and commercial vehicles, as well as agricultural and marine leisure applications. Industrial markets – under the division **GNB Industrial Power** – include efficient energy storage solutions for motive power applications such as lift trucks, cleaning machines and other commercial electrical vehicles, and network power applications such as telecommunications systems, renewables, and uninterruptible power supply (UPS).

Exide's engineers have always been at the forefront of bringing important innovations to the industry. Exide's ISO/TS-certified manufacturing facilities ensure that customers receive products that are produced with maximum efficiency and fulfill the highest quality standards, while minimizing impact on the environment.

Exide's extensive sales and distribution network provides quality service and delivers on time to its customers. Its world-class recycling facilities ensure that batteries will be reused, helping to make a positive contribution to the environment. Exide also provides services, accessories and energy consulting to its clients.

- Headquarters
- Manufacturing plants
- Recycling plants
- Distribution centers
- Main sales offices
- R&D centres

**Manufacturing plants ISO 9001 and ISO 14001 certified**

**Automotive plants IATF 16949 approved**

NXCSLTEPDF01120 Subject to alterations

EXIDE TECHNOLOGIES | POWERING THE WORLD **FORWARD**

www.exidegroup.com